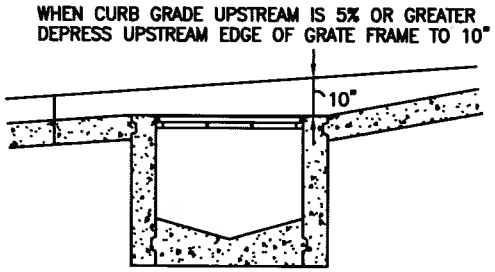

DETAIL FOR STEEP CURB SLOPE

N.T.S.

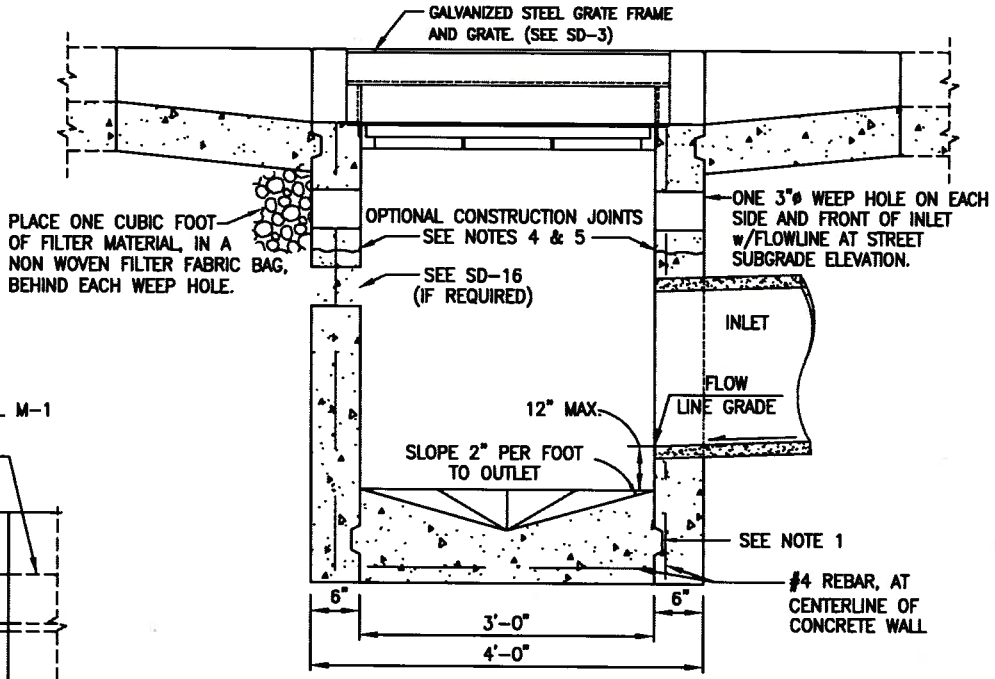

SECTION A-A

N.T.S.

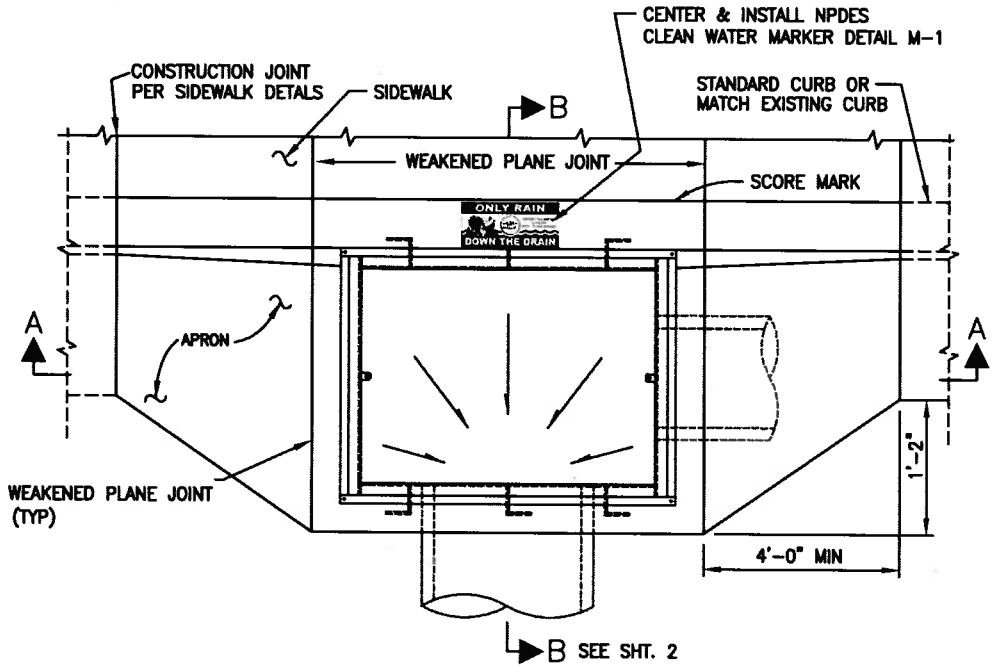

PLAN

N.T.S.

GRATE NOT SHOWN

DIMENSION "A"		
UPSTREAM CURB GRADE	"A" UPSTREAM	"A" DOWNSTREAM
2% & LESS	2'	2'
3%	3'	2'
4%	4'	2'
5%	5'	2'
6%	6'	2'
7%	7'	1'
8%	8'	1'
9%	9'	1'
10% & GREATER	10'	1'

SEE "DETAIL FOR STEEP CURB SLOPE"

CITY OF SAN RAMON	DRAWN BY: ELR	STANDARD DETAIL	APPROVED BY: DATE: 6/1/11
	CHECKED BY: ENGINEERING		Brian R Bornstein CITY ENGINEER
DETAIL SD-1a	DATE: 05/20/11	TYPE "A" INLET CURB INLET	SHT 1 of 2

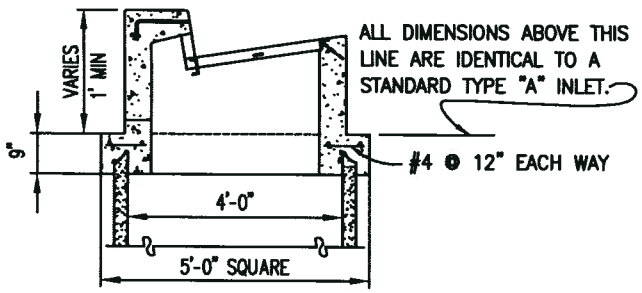

SECTION OF

TYPE "A" OPENING

ON PRECAST MANHOLE BARREL
N.T.S.
REFER TO STANDARD DETAIL SD-6

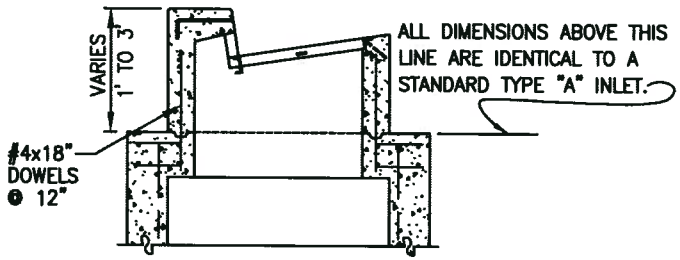

SECTION OF

TYPE "A" OPENING

ON MANHOLE BASE
N.T.S.
REFER TO STANDARD DETAIL SD-7

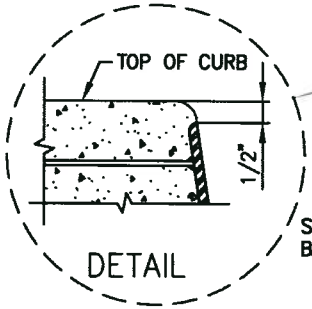

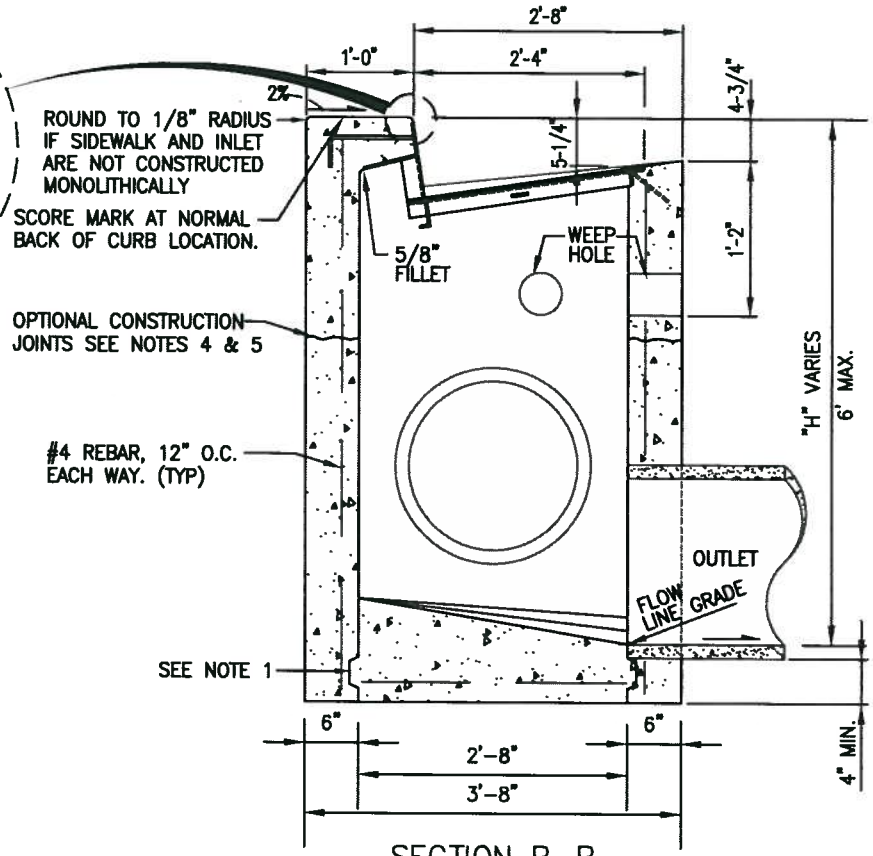

SECTION B-B

N.T.S.
GRATE NOT SHOWN

NOTES:

1. CONSTRUCTION JOINTS ARE OPTIONAL WHERE SHOWN; OTHER LOCATIONS ARE SUBJECT TO THE APPROVAL OF THE ENGINEER. KEY DIMENSIONS – 3/4" x 2-1/2".
2. WHEN DIMENSION "H" EXCEEDS 6', USE A MANHOLE WITH A TYPE "A" INLET OPENING ON TOP.
3. INLET AND OUTLET PIPES SHALL NOT INTERCEPT A BOX THROUGH A CORNER. IF THE PIPE IS TOO LARGE OR THE SKEW ANGLE IS TOO GREAT TO PERMIT THE OPENING TO BE MADE IN A SINGLE WALL, USE A MANHOLE BASE WITH A TYPE "A" INLET OPENING ON TOP.
4. CONSTRUCTION JOINTS SHOWN ARE PERMITTED WHEN TOP PORTION OF INLET IS TO BE CONSTRUCTED MONOLITHICALLY WITH CURB AND SIDEWALK, IN WHICH CASE THE FOLLOWING SHALL APPLY:
   a. CONCRETE ABOVE & BELOW CONSTRUCTION JOINT SHALL BE CLASS A (6 SACKS PER CU. YD.)
   b. CONSTRUCTION JOINT SHALL BE LOCATED AT PAVEMENT SUBGRADE.
5. WHEN INLET IS CONSTRUCTED AS A SINGLE UNIT, ALL CONCRETE SHALL BE CLASS A.
6. CLEARANCE SHALL BE 1 1/2" FOR ALL REINFORCING STEEL.

San Ramon CALIFORNIA INCORPORATED 1980	CITY OF SAN RAMON	DRAWN BY: ELR	STANDARD DETAIL	APPROVED BY: DATE: 6/6/11
		CHECKED BY: ENGINEERING		Brian R Bornstein CITY ENGINEER
	DETAIL SD-1b	DATE: 05/20/11	TYPE "A" INLET CURB INLET	SHT 2 of 2

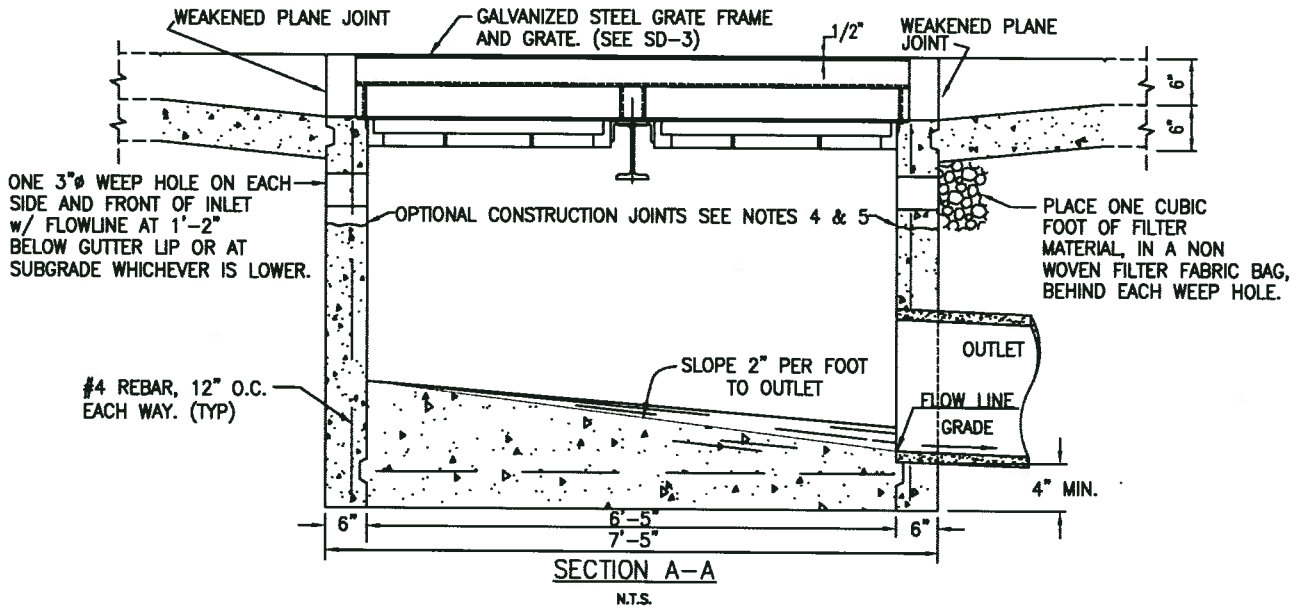

SECTION A-A

N.T.S.

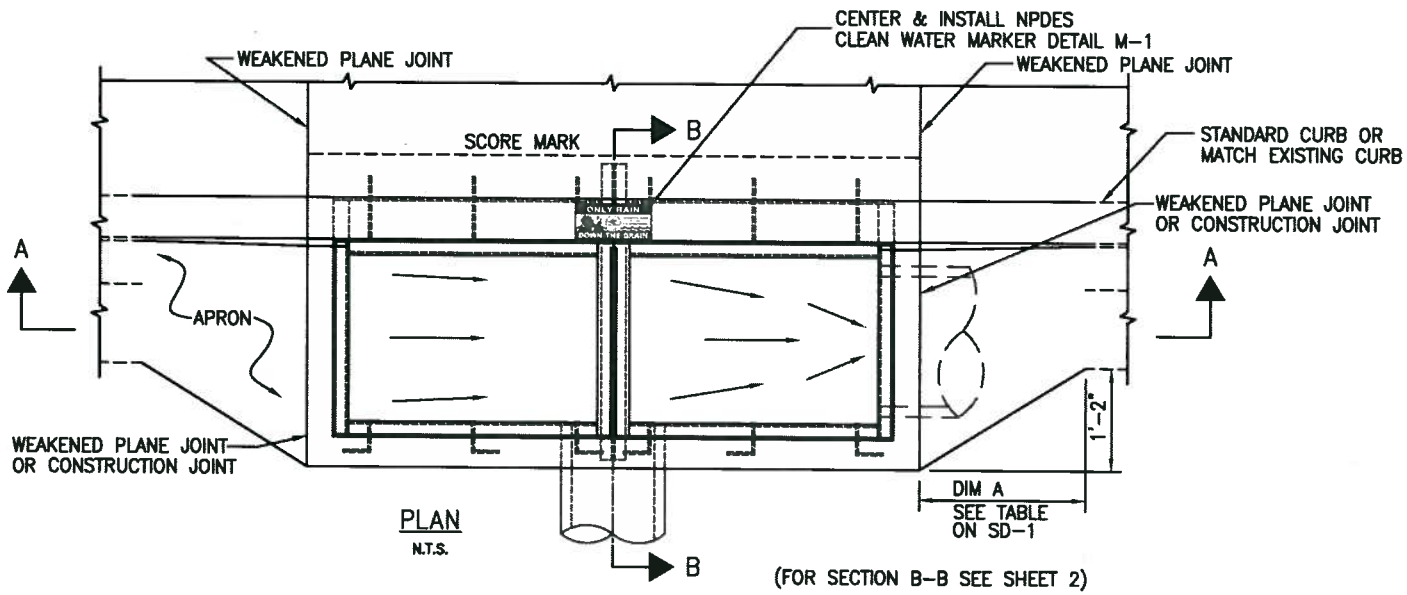

PLAN

N.T.S.

(FOR SECTION B-B SEE SHEET 2)

CITY OF SAN RAMON	DRAWN BY: ELR	STANDARD DETAIL	APPROVED BY: DATE: 6/1/11 Brian R Boenstein CITY ENGINEER
	CHECKED BY: ENGINEERING		
DETAIL SD-2a	DATE: 05/20/11	TYPE "B" INLET CURB INLET	SHT 1 of 2

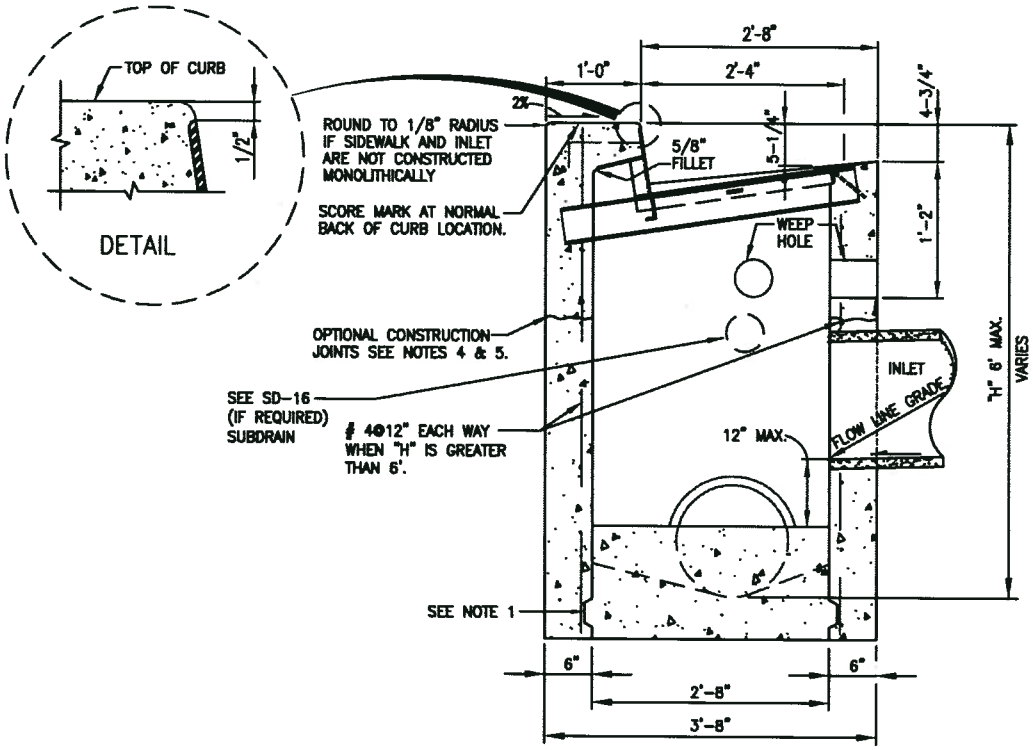

SECTION B-B

N.T.S.
GRATE NOT SHOWN

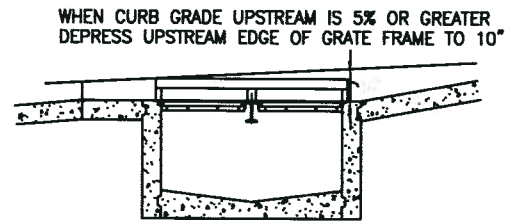

DETAIL FOR STEEP CURB SLOPE

NOTES:

1. CONSTRUCTION JOINTS ARE OPTIONAL WHERE SHOWN; OTHER LOCATIONS ARE SUBJECT TO THE APPROVAL OF THE ENGINEER. KEY DIMENSIONS – 3/4" x 2-1/2".
2. WHEN DIMENSION "H" EXCEEDS 6', USE A MANHOLE WITH A TYPE "A" INLET OPENING ON TOP.
3. INLET AND OUTLET PIPES SHALL NOT INTERCEPT A BOX THROUGH A CORNER. IF THE PIPE IS TOO LARGE OR THE SKEW ANGLE IS TOO GREAT TO PERMIT THE OPENING TO BE MADE IN A SINGLE WALL, USE A MANHOLE BASE WITH A TYPE "A" INLET OPENING ON TOP.
4. CONSTRUCTION JOINTS SHOWN ARE PERMITTED WHEN TOP PORTION OF INLET IS TO BE CONSTRUCTED MONOLITHICALLY WITH CURB AND SIDEWALK, IN WHICH CASE THE FOLLOWING SHALL APPLY:
   a. CONCRETE ABOVE & BELOW CONSTRUCTION JOINT SHALL BE CLASS A (6 SACKS PER CU. YD.)
   b. CONSTRUCTION JOINT SHALL BE LOCATED AT PAVEMENT SUBGRADE.
5. WHEN INLET IS CONSTRUCTED AS A SINGLE UNIT, ALL CONCRETE SHALL BE CLASS A.
6. CLEARANCE SHALL BE 1 1/2" FOR ALL REINFORCING STEEL.

San Ramon CALIFORNIA INCORPORATED 1983	CITY OF SAN RAMON	DRAWN BY: ELR	STANDARD DETAIL	APPROVED BY: DATE: 6/1/11
		CHECKED BY: ENGINEERING		Brian R Bernstein CITY ENGINEER
	DETAIL SD-2b	DATE: 05/20/11	TYPE "B" INLET CURB INLET	SHT 2 of 2

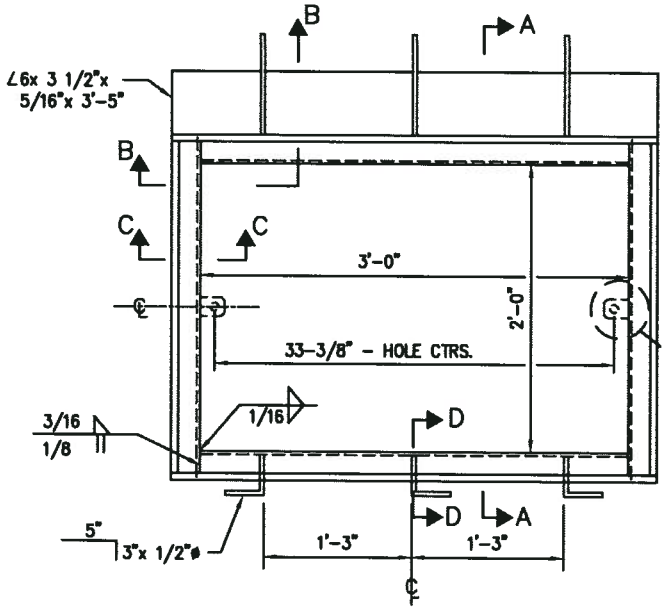

PLAN
N.T.S.

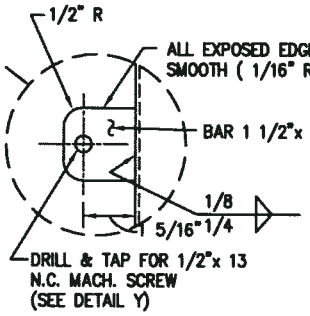

DETAIL Z
N.T.S.

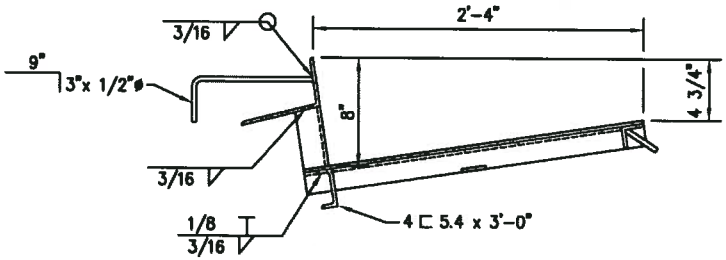

SECTION AA
N.T.S.

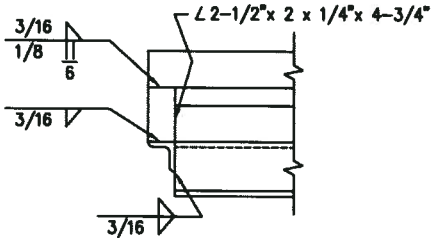

SECTION BB
N.T.S.

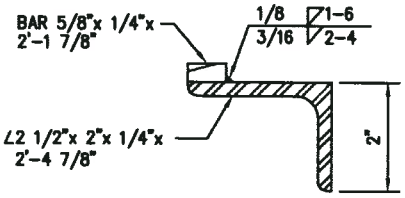

SECTION CC
N.T.S.

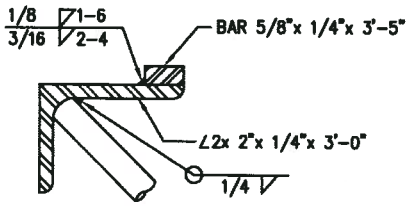

SECTION DD
N.T.S.

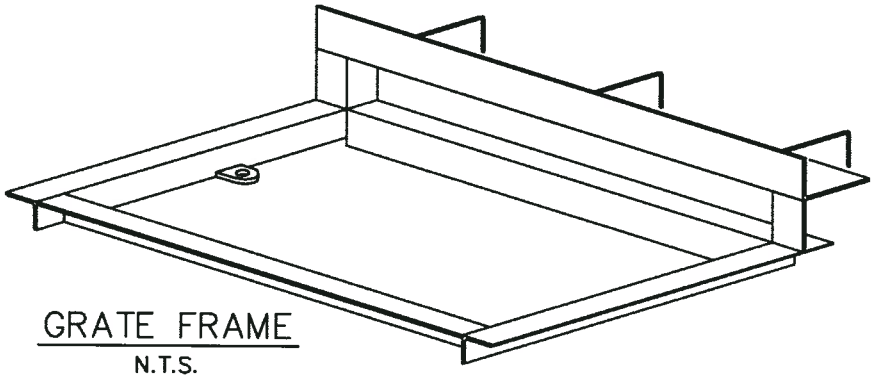

GRATE FRAME
N.T.S.

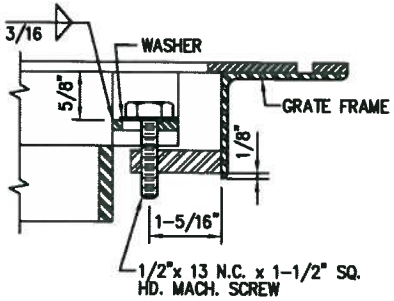

DETAIL Y
N.T.S.
GRATE FASTENING LUG
FOR INLET FRAME

San Ramon CALIFORNIA INCORPORATED 1983	CITY OF SAN RAMON	DRAWN BY: ELR	STANDARD DETAIL	APPROVED BY: DATE: 6/1/11
		CHECKED BY: ENGINEERING		Brian K. Bornstein CITY ENGINEER
	DETAIL SD-3a	DATE: 05/20/11	CURB INLET FRAME AND GRATE	SHT 1 of 2

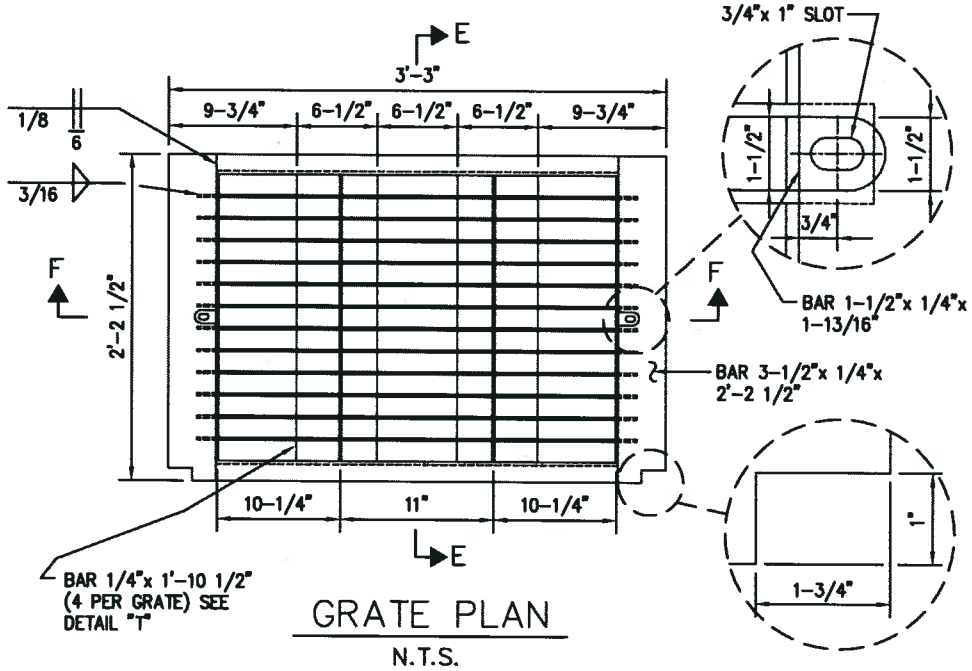

GRATE PLAN

N.T.S.

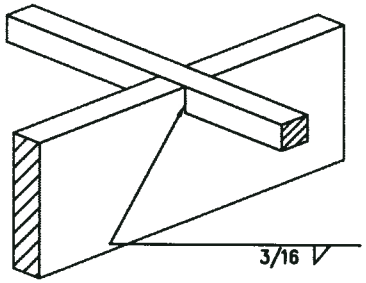

DETAIL T

N.T.S.

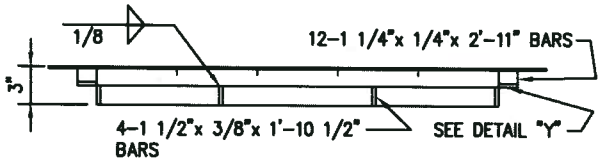

SECTION FF

N.T.S.

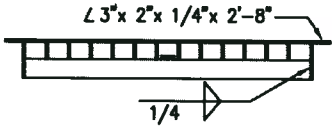

SECTION EE

N.T.S.

NOTES:

1. ALL MATERIALS, FABRICATION, GALVANIZING, AND SURFACE TREATMENT SHALL BE IN ACCORDANCE WITH SECTIONS 75 AND 96 OF THE CURRENT ISSUE OF THE STANDARD SPECIFICATIONS OF THE STATE OF CALIFORNIA, BUSINESS AND TRANSPORTATION AGENCY, DEPARTMENT OF TRANSPORTATION.
2. FRAMES AND COVERS SHALL FIT TOGETHER WITHOUT ROCKING.
3. FABRICATOR SHALL SUPPLY FASTENING SCREWS WITH FRAMES.
4. WEIGHTS: GRATE FRAME 88 lb., GRATE 94 lb.
5. 1/2"x 5 1/4" NELSON-TYPE HEADED STUDS MAY BE USED IN LIEU OF 1/2"x 5"x 3" ANCHORS.
6. IF THE GRATE IS IN THE BIKE LANE, A BIKE GRATE IS REQUIRED TO CURRENT CALTRANS STANDARD.

San Ramon CALIFORNIA INCORPORATED 1980	CITY OF SAN RAMON	DRAWN BY: ELR	STANDARD DETAIL	APPROVED BY: DATE: 6/1/11
		CHECKED BY: ENGINEERING		Brian R. Bornstein CITY ENGINEER
	DETAIL SD-3b	DATE: 05/20/11	CURB INLET FRAME AND GRATE	SHT 2 of 2

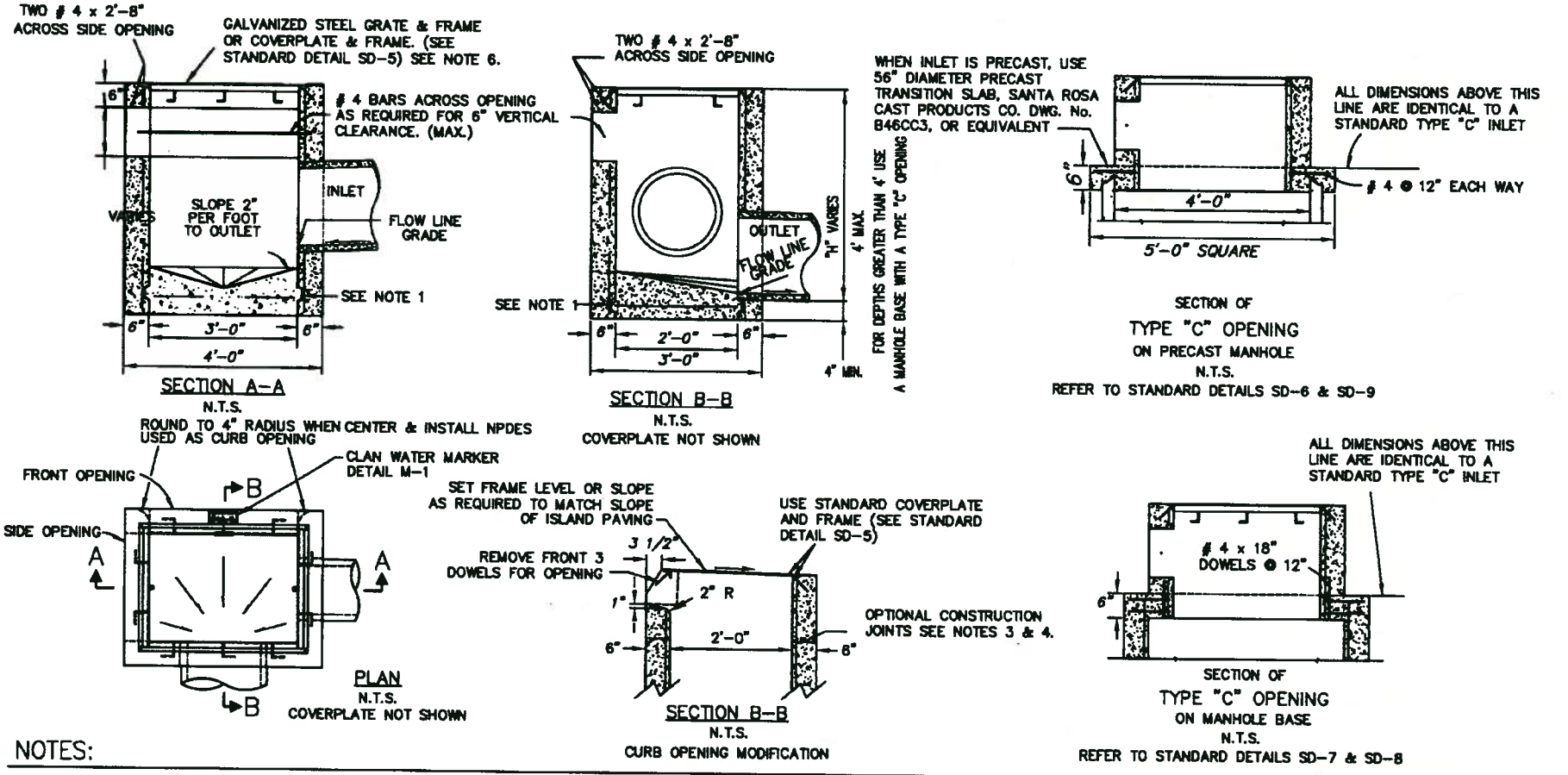

NOTES:

1. CONSTRUCTION JOINTS ARE OPTIONAL WHERE SHOWN; OTHER LOCATIONS ARE SUBJECT TO THE APPROVAL OF THE ENGINEER. KEY DIMENSIONS – 3/4" x 2-1/2".
2. INLET AND OUTLET PIPES SHALL NOT INTERCEPT A BOX THROUGH A CORNER. IF THE PIPE IS TOO LARGE OR THE SKEW ANGLE IS TOO GREAT TO PERMIT THE OPENING TO BE MADE IN A SINGLE WALL, USE A MANHOLE BASE WITH A TYPE "C" INLET OPENING ON TOP.
3. CONSTRUCTION JOINTS SHOWN ARE PERMITTED WHEN TOP PORTION OF INLET IS TO BE CONSTRUCTED MONOLITHICALLY WITH CURB AND SIDEWALK, IN WHICH CASE THE FOLLOWING SHALL APPLY:
   a. CONCRETE ABOVE & BELOW CONSTRUCTION JOINT SHALL BE CLASS A (6 SACKS PER CU. YD.)
   b. CONSTRUCTION JOINT SHALL BE LOCATED AT PAVEMENT SUBGRADE.
4. WHEN INLET IS CONSTRUCTED AS A SINGLE UNIT, ALL CONCRETE SHALL BE CLASS A.
5. LOCATION AND SIZE OF OPENINGS TO BE AS SHOWN ON PLANS OR AS OTHERWISE DETERMINED BY ENGINEER.
6. ALL INLETS SHALL BE CONSTRUCTED WITH GRATE UNLESS THE INLET IS TO BE IN PEDESTRIAN AREA, THEN A COVER PLATE SHALL BE USED.
7. PRECAST INLET, CONFORMING TO SANTA ROSA, CAST PRODUCTS CO. DRAWING No. B44CC1 OR EQUIVALENT, CAN BE SUBSTITUTED FOR CAST-IN-PLACE INLET.
8. #4 REBAR 12" O.C. BOTHWAYS IN WALLS AND BOTTOM.

San Ramon CALIFORNIA	CITY OF SAN RAMON	DRAWN BY: ELR	STANDARD DETAIL	APPROVED BY: DATE: 6/15/09
		CHECKED BY: ENGINEERING		CITY ENGINEER
	DETAIL SD-4	DATE: 08/01/08	TYPE "C" INLET (DROP INLET)	SHT 1 of 1

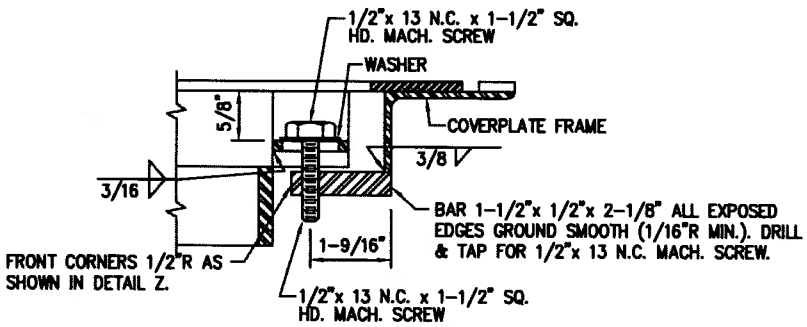

DETAIL W – GRATE FASTENING LUG FOR COVERPLATE FRAME

N.T.S.

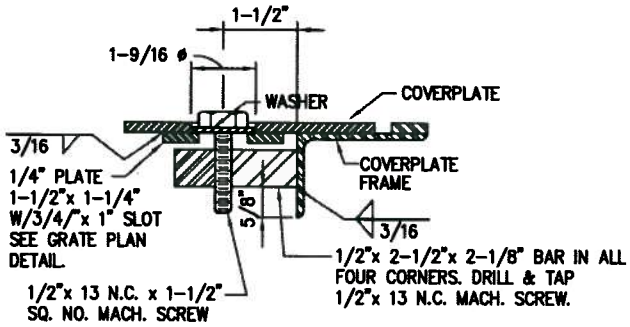

DETAIL V

N.T.S.

ALSO SEE DETAIL X

COVERPLATE FASTENER

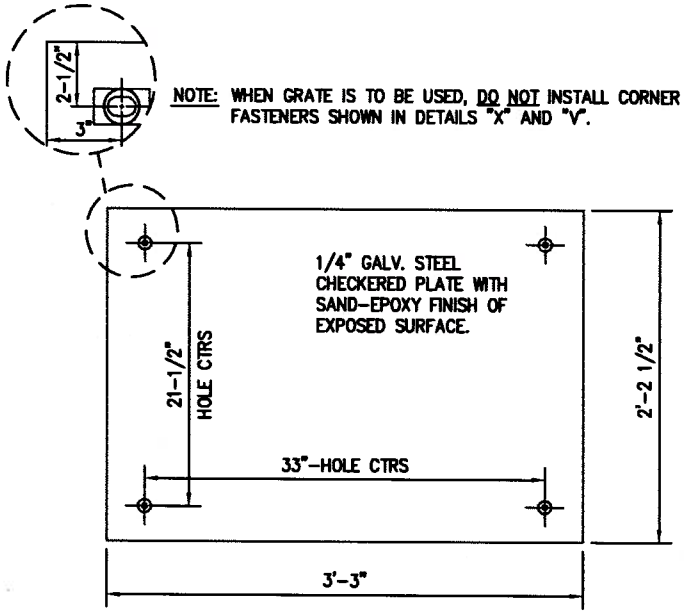

NOTE: WHEN GRATE IS TO BE USED, DO NOT INSTALL CORNER FASTENERS SHOWN IN DETAILS "X" AND "V".

COVERPLATE

N.T.S.

COVERPLATE – SAND-EPOXY FINISH NOTES

1. SURFACE TO BE COATED SHALL BE SAND BLASTED THE MINIMUM REQUIRED TO OBTAIN A DULL GREY FINISH.(SEE NOTE 1)
2. A 60 MIL. COAT OF BINDER (ADHESIVE), EPOXY RESIN BASE, AS PER SECTION 96-2.01 OF THE STANDARD SPECIFICATIONS SHALL BE APPLIED TO THE EXPOSED SURFACE OF THE COVER PLATE. BOLT HOLES SHALL NOT BE COATED. (SEE NOTE 1)
3. CLEAN, DRY, SILICA SAND SHALL BE APPLIED TO COMPLETELY COVER THE EPOXIED SURFACE.
4. THE SAND-EPOXY FINISH SHALL BE CURED FOR 6 HOURS AND EXCESS SAND SHALL BE REMOVED.

NOTES:

1. ALL MATERIALS, FABRICATION, GALVANIZING, AND SURFACE TREATMENT SHALL BE IN ACCORDANCE WITH SECTIONS 75 AND 96 OF THE CURRENT ISSUE OF THE STANDARD SPECIFICATIONS OF THE STATE OF CALIFORNIA, BUSINESS AND TRANSPORTATION AGENCY, DEPARTMENT OF TRANSPORTATION.
2. FRAMES AND COVERS SHALL FIT TOGETHER WITHOUT ROCKING.
3. FABRICATOR SHALL SUPPLY FASTENING SCREWS WITH FRAMES.
4. WEIGHTS: GRATE FRAME 88 lb., GRATE 94lb., COVERPLATE FRAME 45lb., COVERPLATE 74 lb.
5. 1/2"x 5 1/4" NELSON-TYPE HEADED STUDS MAY BE USED IN LIEU OF 1/2"x 5"x 3" ANCHORS.

San Ramon CALIFORNIA	CITY OF SAN RAMON	DRAWN BY: ELR	STANDARD DETAIL	APPROVED BY: DATE: 6/1/11
		CHECKED BY: ENGINEERING		Brian R Bornstein CITY ENGINEER
	DETAIL SD-5b	DATE: 05/20/11	DROP INLET – FRAME, GRATE AND COVER PLATE	SHT 2 of 2

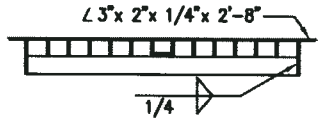

SECTION EE
N.T.S.

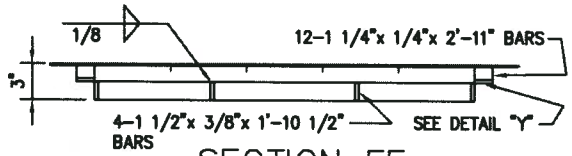

SECTION FF
N.T.S.

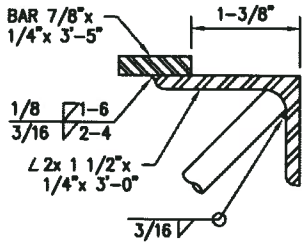

SECTION GG
N.T.S.

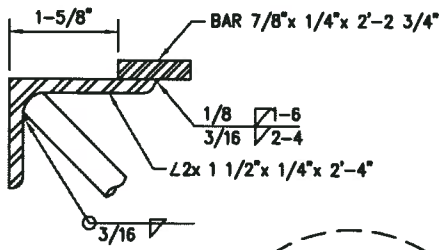

SECTION HH
N.T.S.

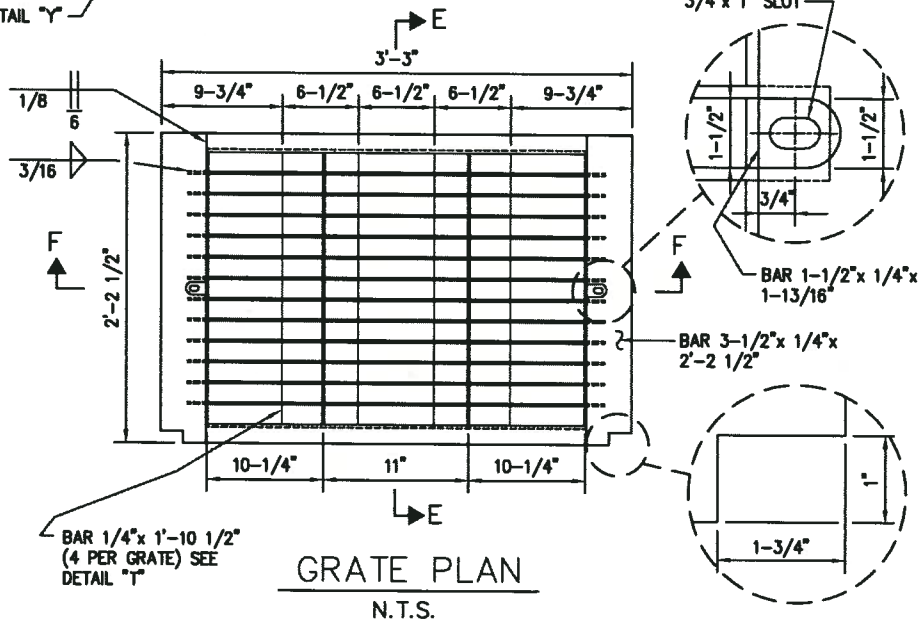

GRATE PLAN
N.T.S.

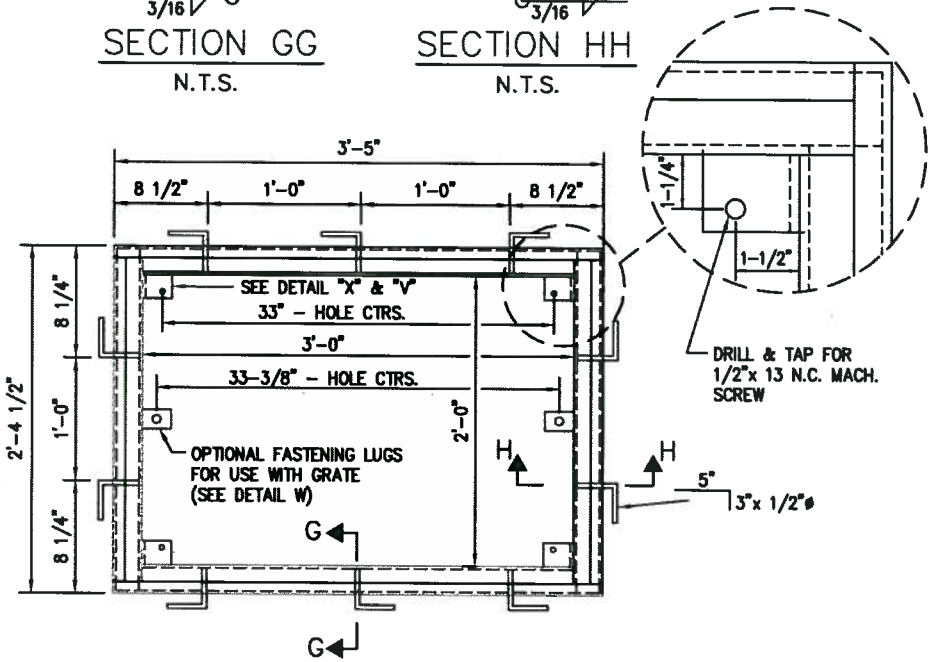

COVERPLATE FRAME
N.T.S.

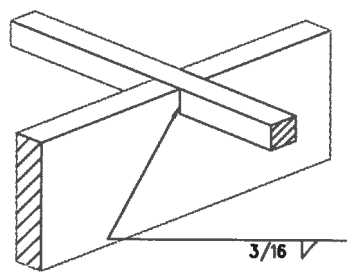

DETAIL T
N.T.S.

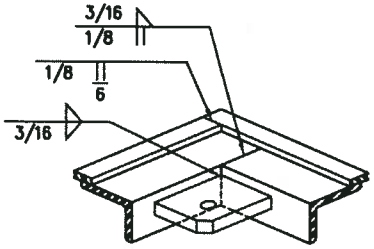

DETAIL X
N.T.S.
ALSO SEE DETAIL V

CITY OF SAN RAMON	DRAWN BY: ELR	STANDARD DETAIL	APPROVED BY: DATE: 6/1/11	
	CHECKED BY: ENGINEERING		Brian R. Bornstein	
DETAIL SD-5a	DATE: 05/20/11	DROP INLET - FRAME & GRATE & COVER PLATE	CITY ENGINEER	
			SHT 1 of 2	

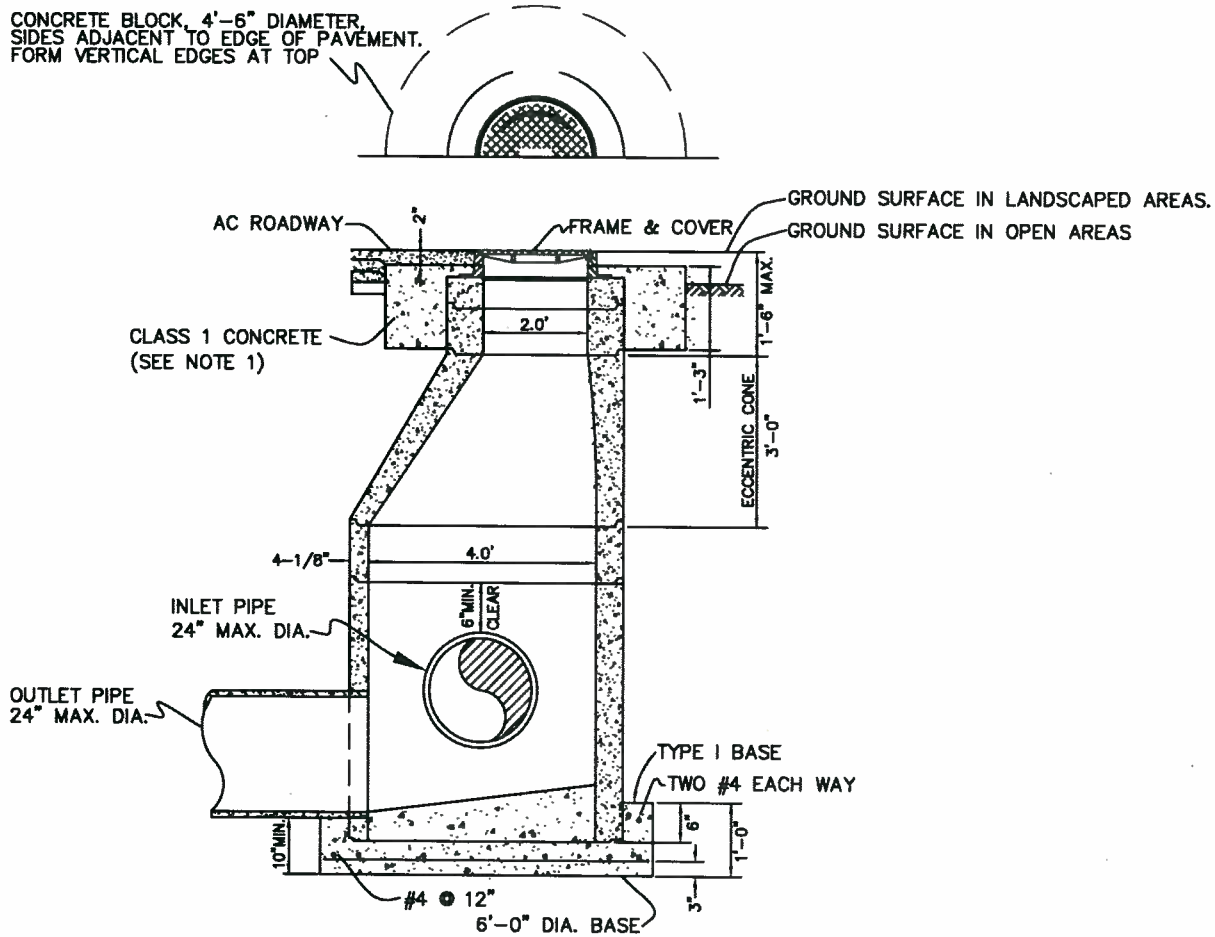

NOTES:

1. ALL REINFORCED CONCRETE SHALL BE CLASS 1 PER CURRENT CALTRANS SPECIFICATION.
2. ALL CONCRETE JOINTS SHALL BE CLEANED, WETTED, AND MORTARED PRIOR TO SETTING NEXT SECTION. JOINTS SHALL THEN BE PATCHED, TROWELLED, AND BRUSHED SMOOTH.
3. TYPE "I" MANHOLE BASES ARE FOR USE WITH PIPES TO 24" IN DIAMETER AND WHERE THERE IS SUFFICIENT COVER TO USE MINIMUM LENGTH MANHOLE BARREL, ECCENTRIC CONE, AND COVER FRAME. TYPE "II" MANHOLE BASES (SD-7) ARE FOR USE WITH PIPES TO 42" IN DIAMETER. TYPE "III" MANHOLE BASES (SD-8) ARE FOR USE WITH PIPES TO 60" IN DIAMETER. MANHOLE BASES FOR PIPES LARGER THAN 60" IN DIAMETER SHALL REQUIRE A SPECIAL DESIGN.
4. USE OF THE EXTENSION RINGS IS LIMITED TO 18" MANHOLE THROAT LENGTH.
5. FRAME AND EXTENSION RINGS MUST BE SECURED BY CONCRETE RING.
6. MANHOLE COVER FRAME SHALL BE ADJUSTED TO CONFORM TO GRADE AND CROSS -SLOPE OF PAVEMENT.
7. FOR DETAILS OF MANHOLE FRAME AND COVER, SEE STANDARD DETAIL SD-9.

San Ramon CALIFORNIA INCORPORATED 1980	CITY OF SAN RAMON	DRAWN BY: ELR	STANDARD DETAIL	APPROVED BY: DATE: 6/1/11
		CHECKED BY: ENGINEERING		Brian R. Bornstein CITY ENGINEER
	DETAIL SD-6	DATE: 05/20/11	PRECAST MANHOLE AND TYPE I BASE	SHT 1 of 1

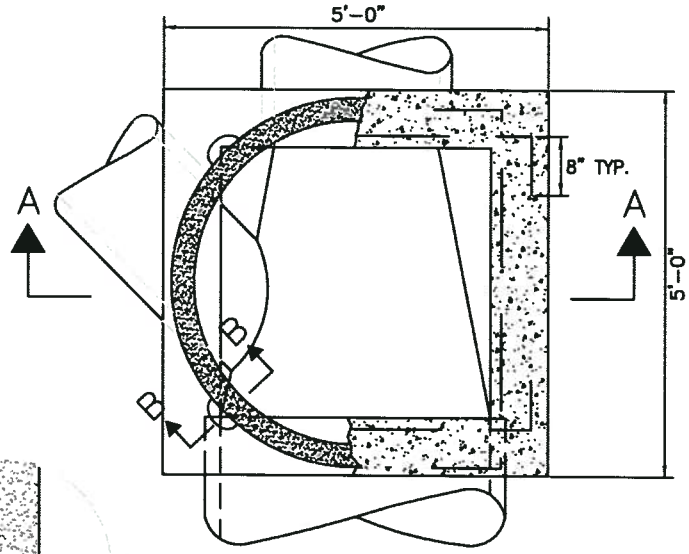

PLAN VIEW
N.T.S.

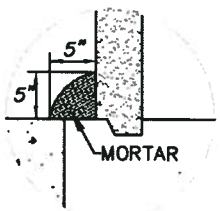

SECTION B–B
N.T.S.

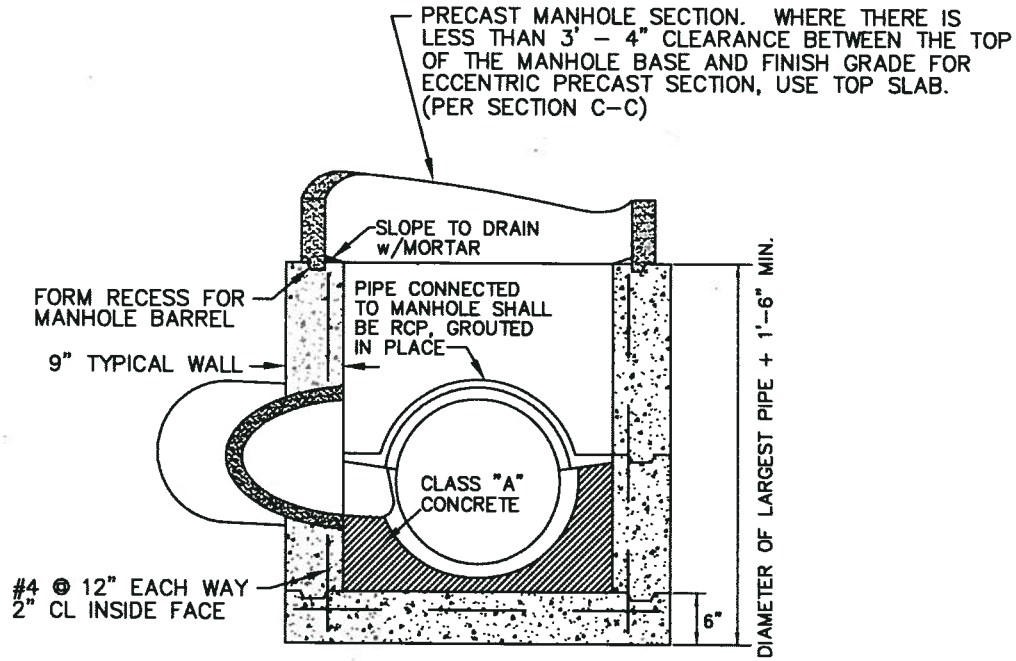

SECTION A–A
N.T.S.

NOTES:

1. ALL REINFORCED CONCRETE SHALL BE CLASS 1 PER CURRENT CALTRANS SPECIFICATION.
2. CONSTRUCTION JOINTS ARE OPTIONAL WHERE SHOWN; OTHER LOCATIONS ARE SUBJECT TO THE APPROVAL OF THE ENGINEER. KEY DIMENSIONS ARE 1 1/2"x 3 1/2".
3. INLET AND OUTLET PIPES SHALL NOT INTERCEPT A MANHOLE BASE THROUGH A CORNER. IF THE SKEW ANGLE IS TOO GREAT TO PERMIT THE OPENING TO BE MADE IN A SINGLE WALL, USE A TYPE "III" MANHOLE BASE. (SEE SD–8)
4. TYPE "I" MANHOLE BASES (SD–6) ARE FOR USE WITH PIPES TO 24" IN DIAMETER AND WHERE THERE IS SUFFICIENT COVER TO USE A MINIMUM LENGTH MANHOLE BARREL, ECCENTRIC CONE, AND COVER FRAME. TYPE "II" MANHOLE BASES (SD–7) ARE FOR PIPES TO 42" DIAMETER. TYPE "III" MANHOLE BASES (SD–8) ARE FOR USE WITH PIPES TO 60" IN DIAMETER. MANHOLE BASES FOR PIPES LARGER THAN 60" IN DIAMETER SHALL REQUIRE A SPECIAL DESIGN.
5. FOR DETAILS OF PRECAST MANHOLE, SEE STANDARD DETAIL SD–6.
6. FOR DETAILS OF MANHOLE FRAME AND COVER, SEE STANDARD DETAIL SD–9.

San Ramon CALIFORNIA INCORPORATED 1983	CITY OF SAN RAMON	DRAWN BY: ELR	STANDARD DETAIL	APPROVED BY: DATE: 6/1/11
		CHECKED BY: ENGINEERING		Brian R Bernstein CITY ENGINEER
	DETAIL SD–7a	DATE: 05/20/11	TYPE II MANHOLE BASE	SHT 1 of 2

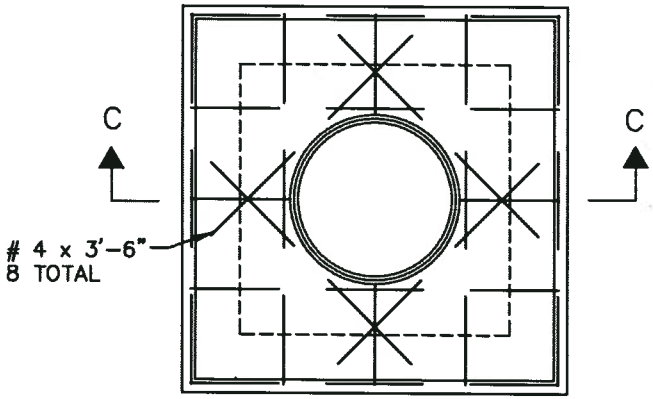

PLAN VIEW
N.T.S.

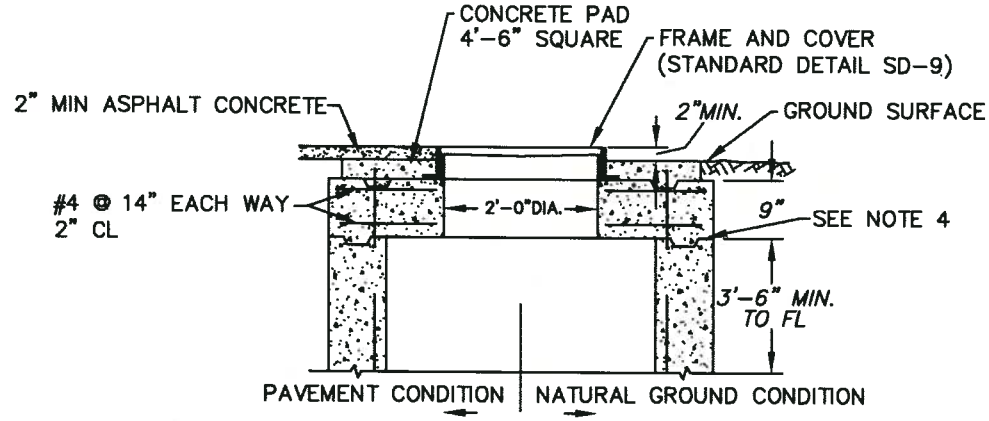

SECTION C-C
TOP SLAB
N.T.S.

NOTES:

1. USE WHERE THERE IS LESS THAN 3' – 4" CLEARANCE BETWEEN THE TOP OF THE MANHOLE BASE AND FINISH GRADE FOR A PRECAST SECTION AND MANHOLE COVER FRAME. ALL REINFORCED CONCRETE SHALL BE CLASS "A".
2. WHEN PLACING A TYPE "A" OR TYPE "C" INLET OPENING ON A TYPE "II" MANHOLE BASE, THE OPENING IN THE SLAB SHALL CONFORM TO THE INSIDE DIMENSIONS OF THE INLET TO BE USED.
3. ALL REINFORCED CONCRETE SHALL BE CLASS 1 PER CURRENT CALTRANS SPECIFICATION..
4. KEY DIMENSIONS ARE 1 1/2"x 3 1/2".
5. FOR DETAILS OF MANHOLE FRAME AND COVER, SEE STANDARD DETAIL SD-9.

San Ramon CALIFORNIA INCORPORATED 1983	CITY OF SAN RAMON	DRAWN BY: ELR	STANDARD DETAIL	APPROVED BY: DATE: 6/1/11
		CHECKED BY: ENGINEERING		Brian R Bornstein CITY ENGINEER
	DETAIL SD-7b	DATE: 05/20/11	TYPE II MANHOLE BASE	SHT 2 of 2

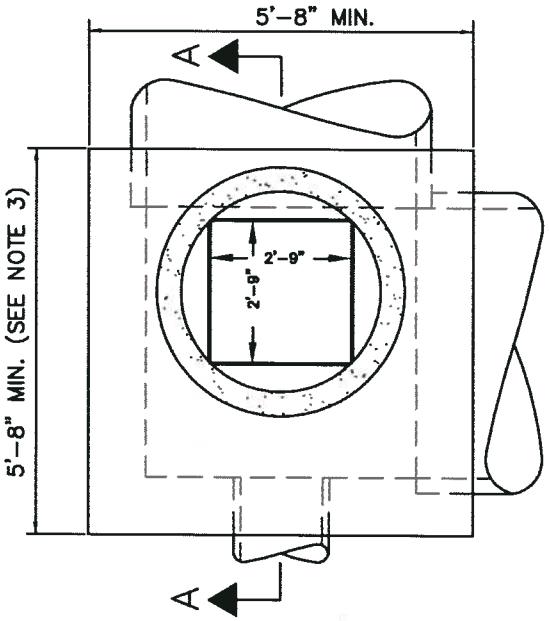

PLAN VIEW
N.T.S.

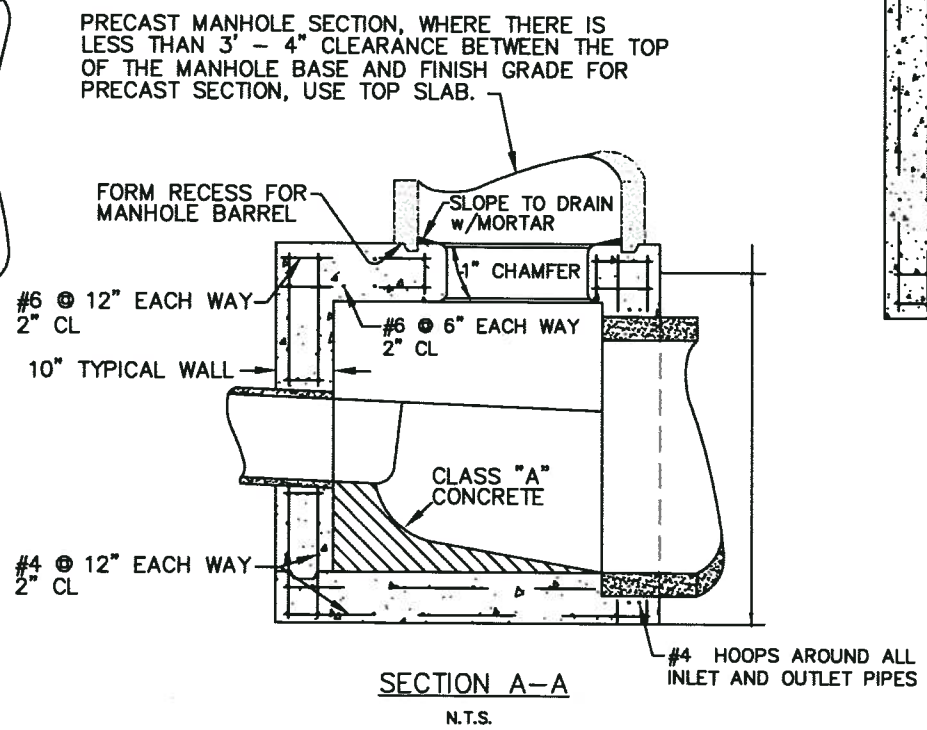

SECTION A-A
N.T.S.

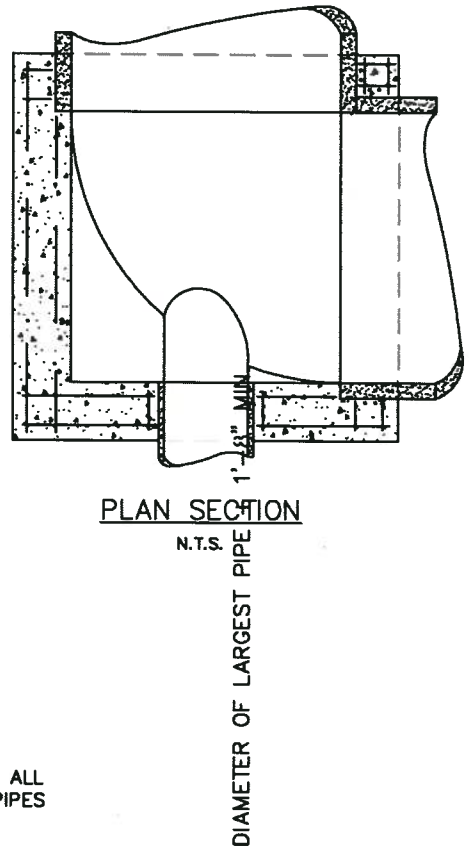

PLAN SECTION
N.T.S.

NOTES:

1. ALL REINFORCED CONCRETE SHALL BE CLASS 1 PER CURRENT CALTRANS SPECIFICATION.
2. CONSTRUCTION JOINTS ARE OPTIONAL WHERE SHOWN; OTHER LOCATIONS ARE SUBJECT TO THE APPROVAL OF THE ENGINEER. KEY DIMENSIONS ARE 1 1/2"x 3 1/2".
3. INLET AND OUTLET PIPES SHALL NOT INTERCEPT A MANHOLE BASE THROUGH A CORNER. IF THE SKEW ANGLE IS TOO GREAT TO PERMIT THE OPENING TO BE MADE IN A SINGLE WALL, THE WALL MAY BE LENGTHENED OR RELOCATED AS EXPLAINED ON SHEET 2 OF 2.
4. TYPE "I" MANHOLE BASES (SD-6) ARE FOR USE WITH PIPES TO 24" IN DIAMETER AND WHERE THERE IS SUFFICIENT COVER TO USE A MINIMUM LENGTH MANHOLE BARREL, ECCENTRIC CONE, AND COVER FRAME. TYPE "II" MANHOLE BASES (SD-7) ARE FOR PIPES TO 42" DIAMETER. TYPE "III" MANHOLE BASES (SD-8) ARE FOR USE WITH PIPES TO 60" IN DIAMETER. MANHOLE BASES FOR PIPES LARGER THAN 60" IN DIAMETER SHALL REQUIRE A SPECIAL DESIGN.
5. FOR DETAILS OF PRECAST MANHOLE, SEE STANDARD DETAIL SD-6.
6. FOR DETAILS OF MANHOLE FRAME AND COVER, SEE STANDARD DETAIL SD-9.

San Ramon CALIFORNIA INCORPORATED 1983	CITY OF SAN RAMON	DRAWN BY: ELR	STANDARD DETAIL	APPROVED BY: DATE: 6/1/11
		CHECKED BY: ENGINEERING		Brian R Bornstein CITY ENGINEER
	DETAIL SD-8a	DATE: 05/20/11	TYPE III MANHOLE BASE	SHT 1 of 2

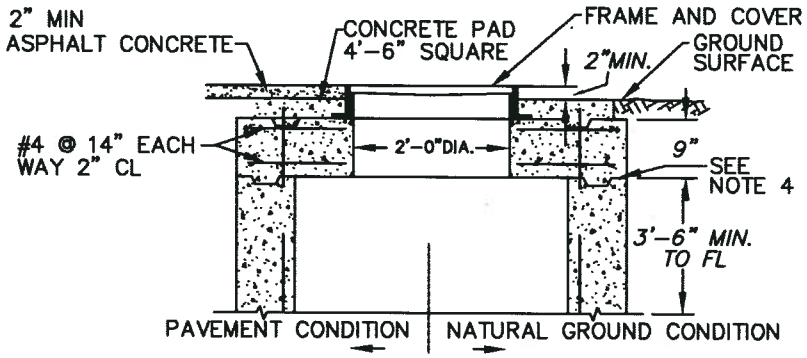

TOP SLAB

N.T.S.

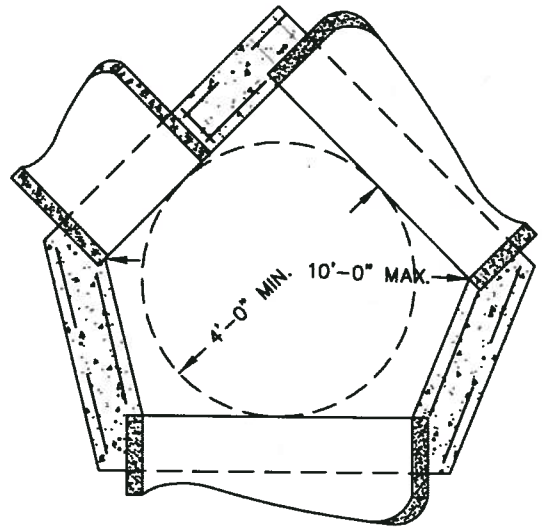

PLAN SECTION

N.T.S.

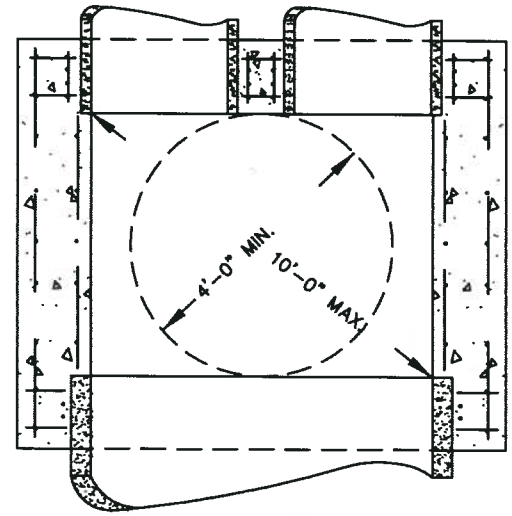

PLAN SECTION

N.T.S.

SPECIAL APPLICATIONS OF TYPE "III" MANHOLE BASES

TOP SLAB NOTES:

1. USE A TOP SLAB WHERE THERE IS LESS THAN 3' – 4" CLEARANCE BETWEEN THE TOP OF THE MANHOLE BASE AND FINISH GRADE FOR A PRECAST SECTION AND MANHOLE COVER FRAME.
2. ALSO USE A TOP SLAB WHEN PLACING A TYPE "A" OR TYPE "C" INLET OPENING ON A TYPE "III" MANHOLE BASE. THE OPENING IN THE SLAB SHALL CONFORM TO THE INSIDE DIMENSIONS OF THE INLET TO BE USED.
3. ALL REINFORCED CONCRETE SHALL BE CLASS 1 PER CURRENT CALTRANS SPECIFICATION.
4. CONSTRUCTION JOINTS ARE OPTIONAL WHERE SHOWN. OTHER LOCATIONS ARE SUBJECT TO THE APPROVAL OF THE ENGINEER. KEY DIMENSIONS ARE 1 1/2"x 3 1/2".
5. FOR DETAILS OF MANHOLE FRAME AND COVER, SEE STANDARD DETAIL SD–9.

NOTE:

WHEN UNUSUAL CIRCUMSTANCES, SUCH AS EXCESSIVE SKEW OR PARALLEL PIPES PREVENT THE USE OF A NORMAL TYPE "III" MANHOLE BASE, THE WALLS MAY BE LENGTHENED OR RELOCATED TO ACCOMMODATE THE PIPES, PROVIDING THE FOLLOWING CRITERIA ARE MET:

1. THE INSIDE DIMENSIONS OF THE BASE SHALL BE SUCH THAT A FOUR FOOT DIAMETER CIRCLE WILL LAY FLAT ON THE FLOOR, AS SHOWN.
2. THE MAXIMUM DISTANCE BETWEEN ANY TWO INSIDE CORNERS SHALL BE 10'–0", AS SHOWN
3. REINFORCEMENT AND FLOOR, WALL, AND TOP THICKNESS SHALL REMAIN THE SAME AS FOR A NORMAL TYPE "III" MANHOLE BASE.
4. NO PIPE SHALL EXCEED 60" INSIDE DIAMETER.

IF ANY ONE OF THESE CRITERIA CANNOT BE MET, A SPECIAL DESIGN WILL BE REQUIRED.

San Ramon CALIFORNIA INCORPORATED 1983	CITY OF SAN RAMON	DRAWN BY: ELR	STANDARD DETAIL	APPROVED BY: DATE: 6/1/11 Brian N. Bornstein CITY ENGINEER
		CHECKED BY: ENGINEERING		
	DETAIL SD–8b	DATE: 05/20/11	TYPE III MANHOLE BASE	SHT 2 of 2

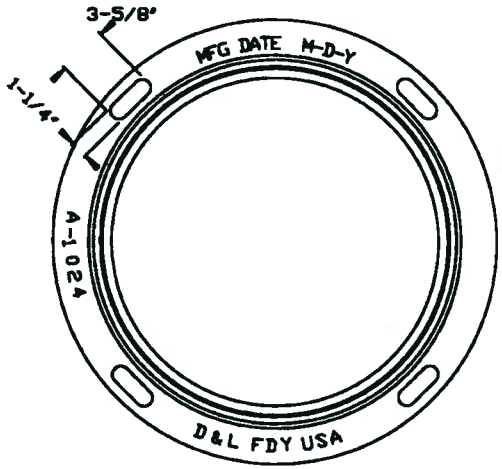

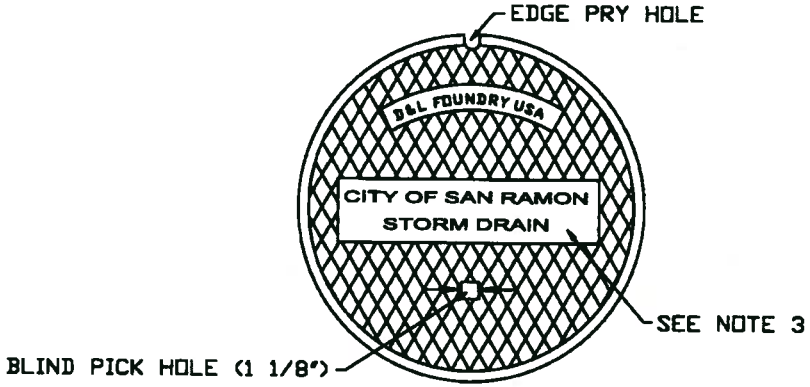

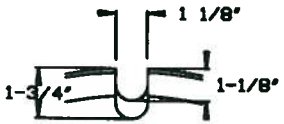

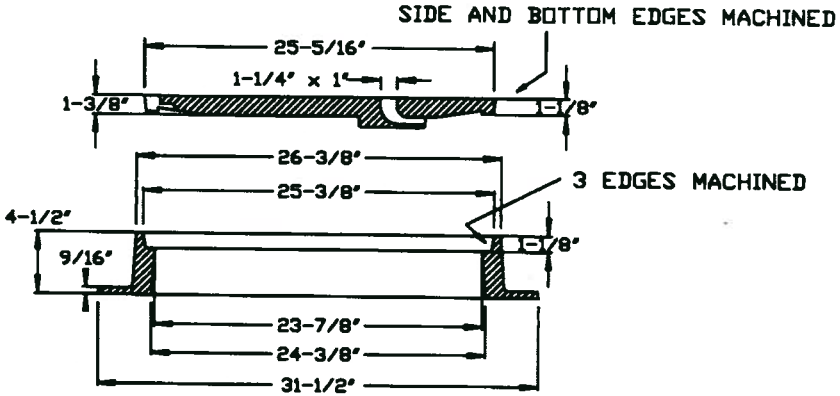

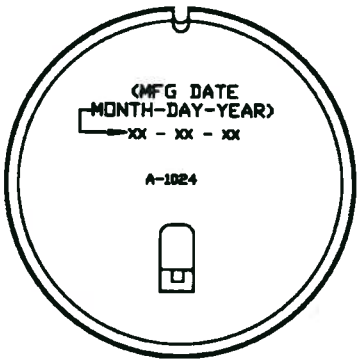

NOTES:

1. ALL MANHOLE COVER CONTACT AND BEARING SURFACES SHALL BE MACHINED TO FIT ACCURATELY SO THAT COVERS WILL NOT ROCK.
2. MANHOLE FRAME AND COVER SHALL BE D&L FOUNDRY MODEL A-1040 OR APPROVED EQUIVALENT.
3. PRIVATE STORM DRAINS MUST BE NOTED AS SUCH.

San Ramon CALIFORNIA	CITY OF SAN RAMON	DRAWN BY: ELR	STANDARD DETAIL	APPROVED BY: DATE: 4/15/09
		CHECKED BY: ENGINEERING		CITY ENGINEER
	DETAIL SD-9	DATE: 12/29/08	STORM MANHOLE FRAME & COVER	SHT 1 of 1

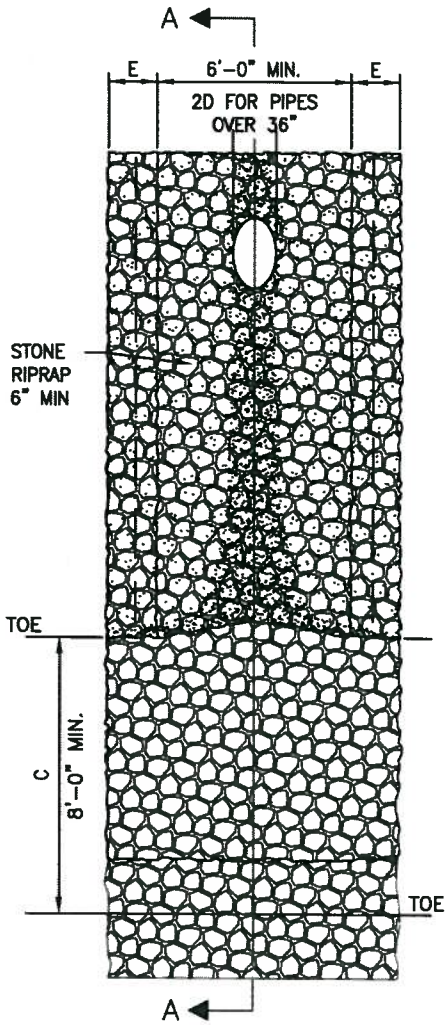

PLAN
N.T.S.

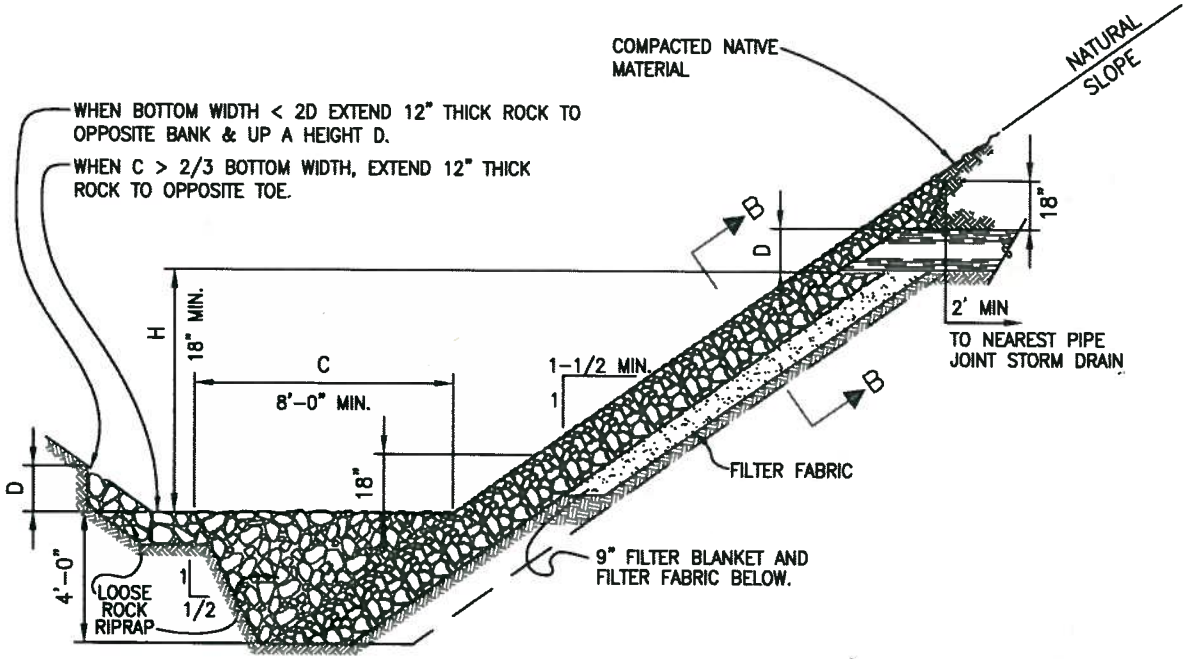

SECTION A–A
N.T.S.

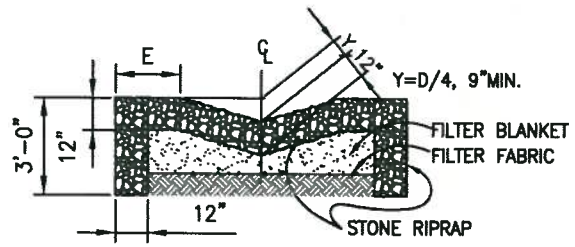

SECTION B–B
N.T.S.

H	E
1'-6" TO 7'-0"	2'-0"
7'-0" TO 14'-0"	4'-0"
14'-0" TO 20'-0"	6'-0"
OVER 20'	8'-0"

NOTES:

1. GROUTED AND LOOSE ROCK RIPRAP SHALL CONFORM TO STATE OF CALIFORNIA STANDARD SPECIFICATIONS.
2. FOR PIPES WITH FLAPGATES SEE STANDARD DETAIL SD–11.
3. FILTER MATERIAL SHALL CONFORM TO STATE OF CALIFORNIA STANDARD SPECIFICATIONS.
4. USE OF THIS DETAIL SUBJECT TO APPROVAL OF CITY ENGINEER.

San Ramon CALIFORNIA INCORPORATED 1983	CITY OF SAN RAMON	DRAWN BY: ELR	STANDARD DETAIL	APPROVED BY: DATE: 6/1/11
		CHECKED BY: ENGINEERING		Brian R Bornstein CITY ENGINEER
	DETAIL SD–10	DATE: 05/20/11	RIPRAP OUTFALL	SHT 1 of 1

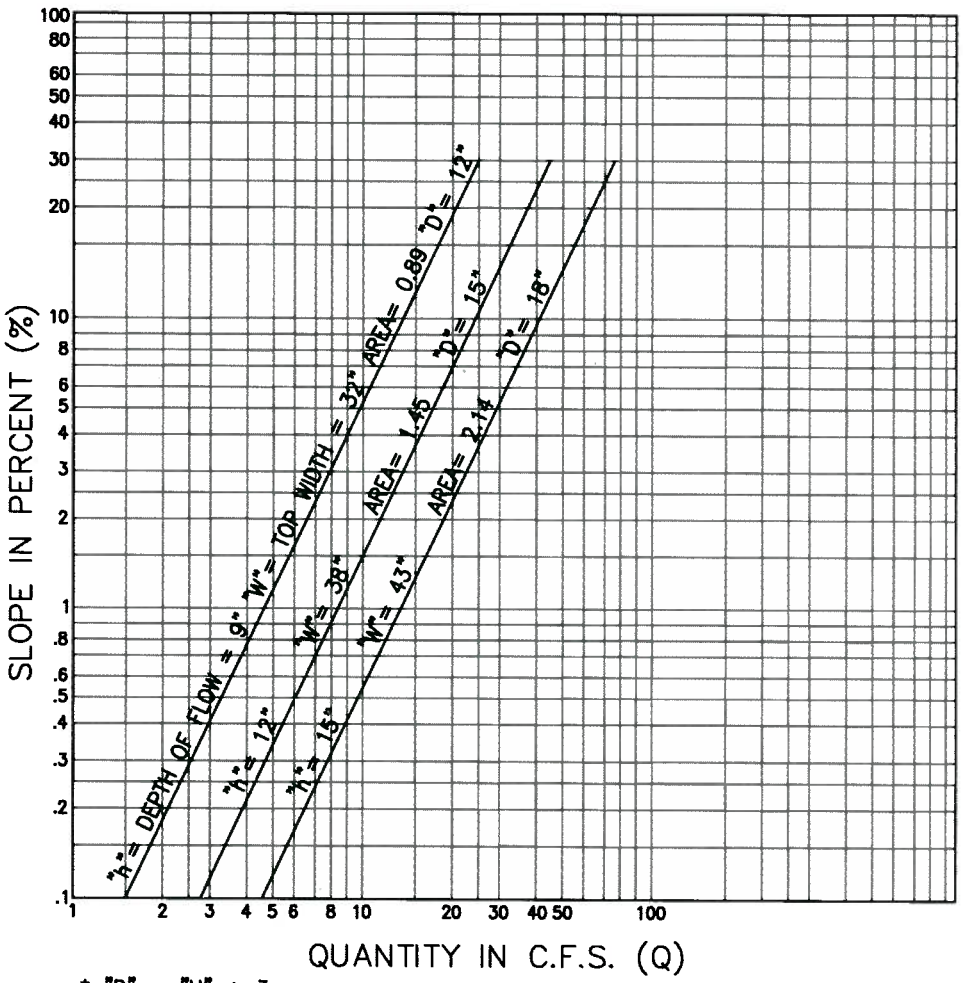

* "D" = "H" + 3

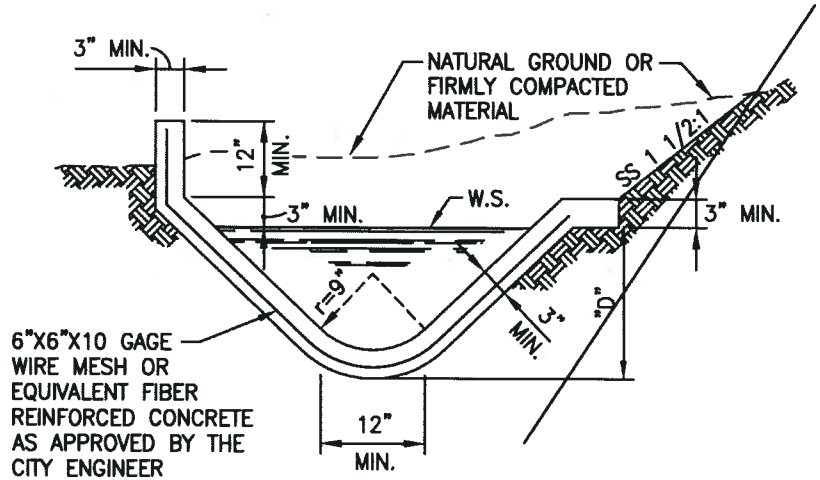

SUPERELEVATED SECTION

N.T.S.

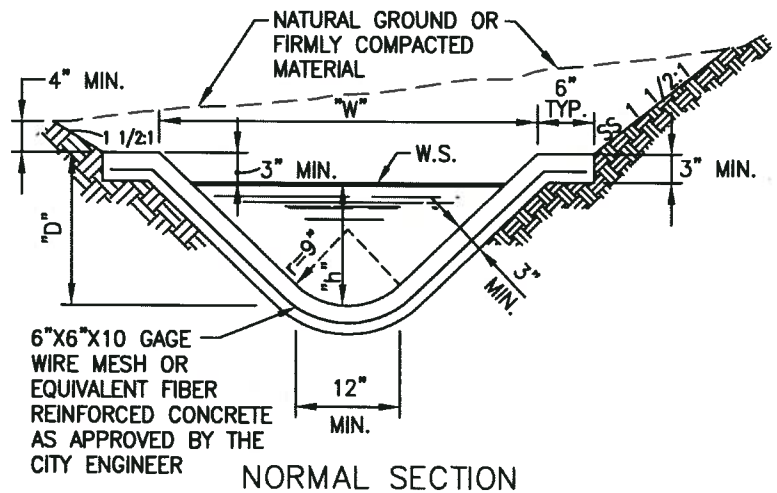

NORMAL SECTION

N.T.S.

CITY OF SAN RAMON	DRAWN BY: ELR	STANDARD DETAIL	APPROVED BY: DATE: 6/1/11	
	CHECKED BY: ENGINEERING		CITY ENGINEER	
DETAIL SD–11	DATE: 05/20/11	PCC V–DITCH	SHT 1 of 1	

D	L	T (MIN.)
12"	1.0'	4"
18"	1.0'	5"
24"	1.0'	6"
36"	1.5'	8"
48"	1.5'	10"
57"	1.5	10"
60"	1.75'	11"
66"	1.75'	11"

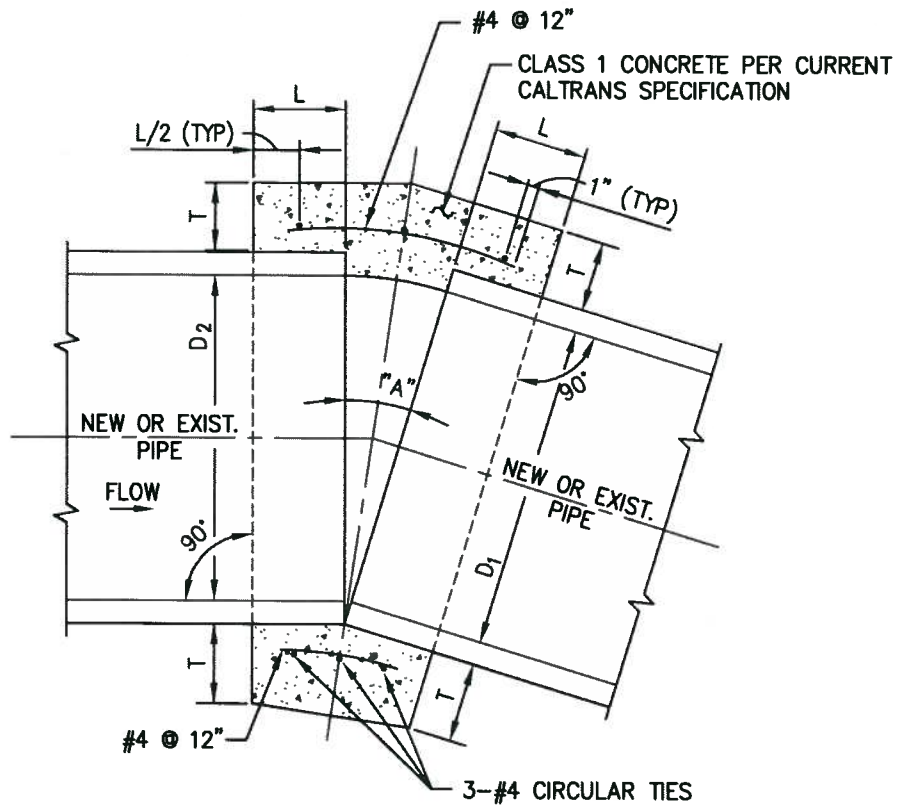

NOTES:

1. TO BE USED ONLY WITH APPROVAL OF THE CITY ENGINEER.
2. WHERE PIPES OF DIFFERENT DIAMETERS ARE JOINED WITH A CONCRETE COLLAR, L AND T SHALL BE THOSE OF THE LARGER PIPE $D=D_1$ OR D_2, WHICHEVER IS GREATER.
3. FOR PIPES LARGER THAN 66" A SPECIAL COLLAR DETAIL IS REQUIRED.
4. FOR PIPE SIZE NOT LISTED USE NEXT SIZE LARGER.
5. OMIT REINFORCING ON PIPES 24" AND LESS IN DIAMETER AND ON ALL PIPES WHERE ANGLE "A" IS LESS THAN 10".
6. WHERE REINFORCING IS REQUIRED THE DIAMETER OF THE CIRCULAR TIES SHALL BE D + (2x WALL THICKNESS) + 8".
7. WHEN D_1 IS EQUAL TO OR LESS THAN D_2, JOIN INVERTS AND WHEN D_1 IS GREATER THAN D_2 JOIN SOFFITS.
8. PIPE MAY BE CORRUGATED METAL PIPE, CONCRETE PIPE, OR REINFORCED CONCRETE PIPE.

San Ramon CALIFORNIA INCORPORATED 1983	CITY OF SAN RAMON	DRAWN BY: ELR	STANDARD DETAIL	APPROVED BY: DATE: 6/1/11
		CHECKED BY: ENGINEERING		Brian N Bornstein CITY ENGINEER
	DETAIL SD-12	DATE: 05/20/11	CONCRETE COLLAR	SHT 1 of 1

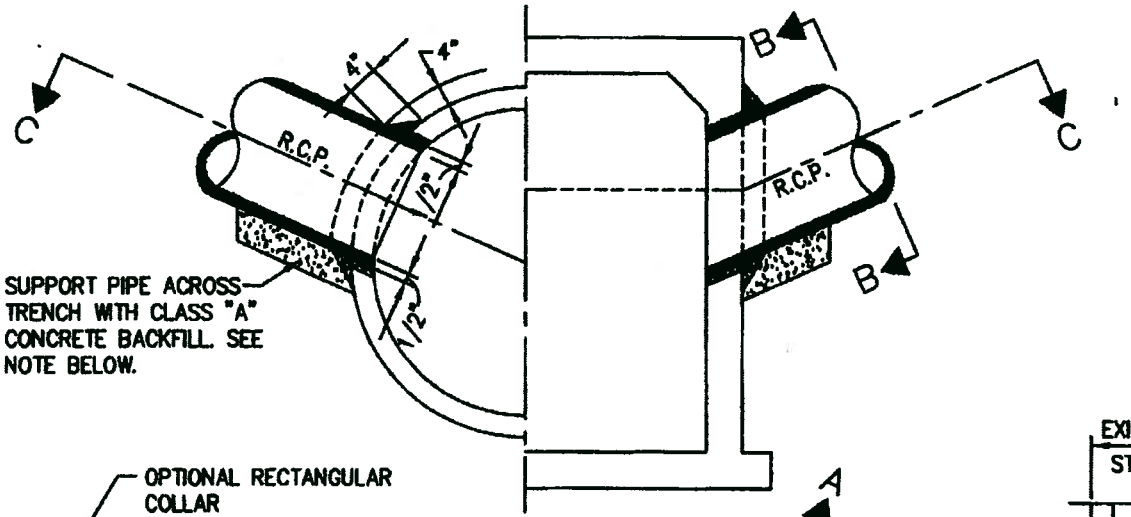

SECTION A–A

N.T.S.

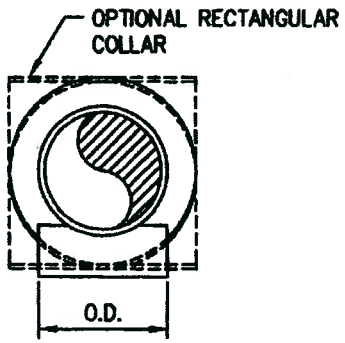

SECTION B–B

N.T.S.

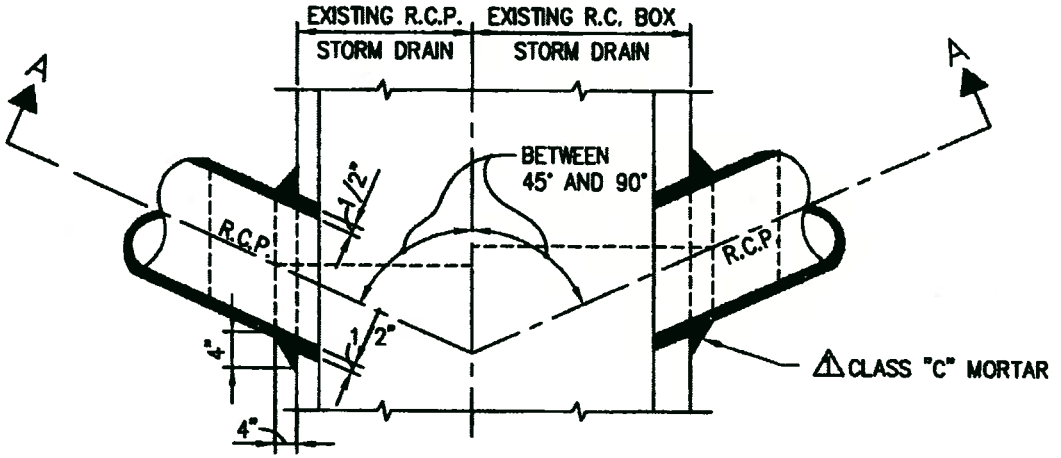

SECTION C–C

N.T.S.

NOTES :

1. TO BE USED ONLY WITH APPROVAL OF THE CITY ENGINEER.
2. O.D. OF CONNECTOR PIPE SHALL NOT BE LARGER THAN ONE–HALF ID OF MAIN R.C.P. STORM DRAIN.
3. THE MINIMUM OPENING INTO THE EXISTING STORM DRAIN SHALL BE THE OUTSIDE DIAMETER OF THE CONNECTING PIPE PLUS 1 INCH.
4. THE CONCRETE BACKFILL SUPPORTING THE CONNECTING PIPE MAY BE OMITTED IF THE PIPE IS LAID ON UNDISTURBED EARTH TO STORM DRAIN WALL.

San Ramon CALIFORNIA	CITY OF SAN RAMON	DRAWN BY: AA & AH	STANDARD DETAIL	APPROVED BY: DATE: 9/18/01
		CHECKED BY: ENGINEERING		CITY ENGINEER
	DETAIL SD–13	DATE: 12/19/00	CONNECTION TO EXISTING STORM DRAIN	SHT 1 of 1

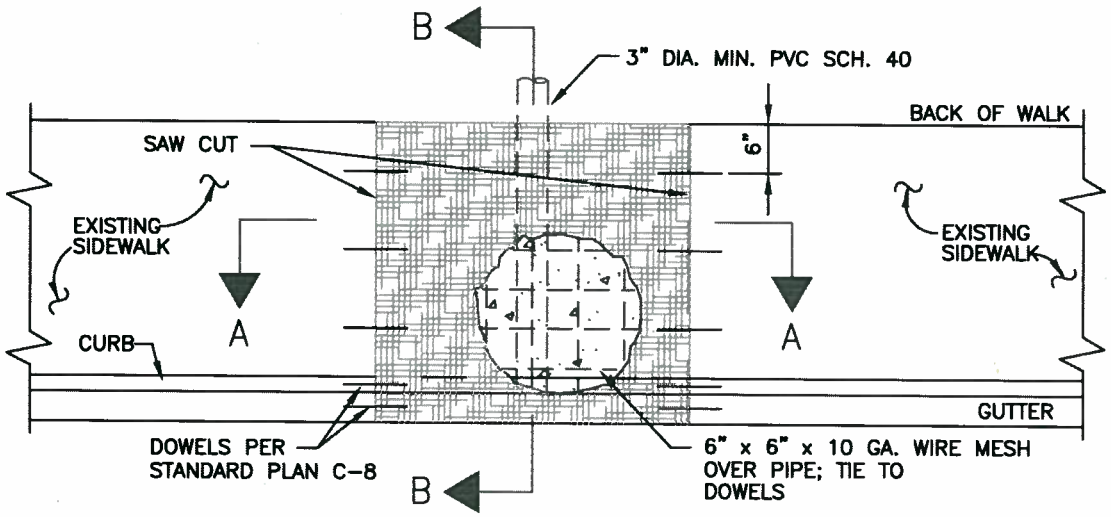

PLAN VIEW

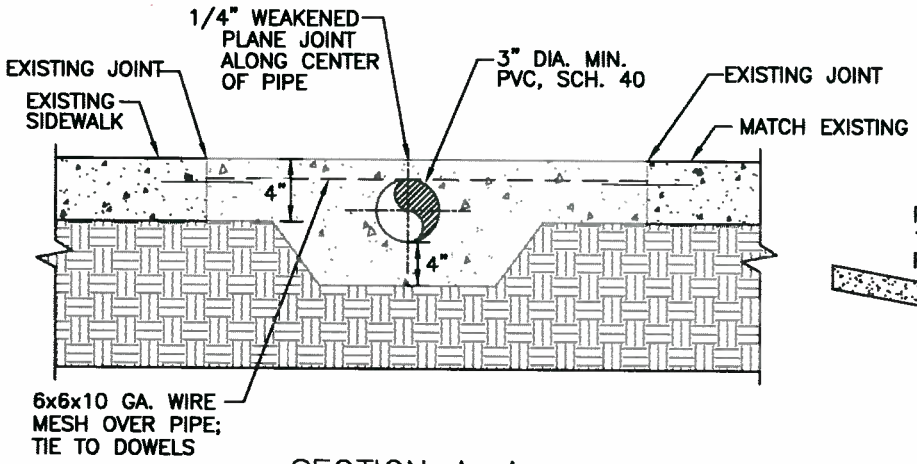

SECTION A-A

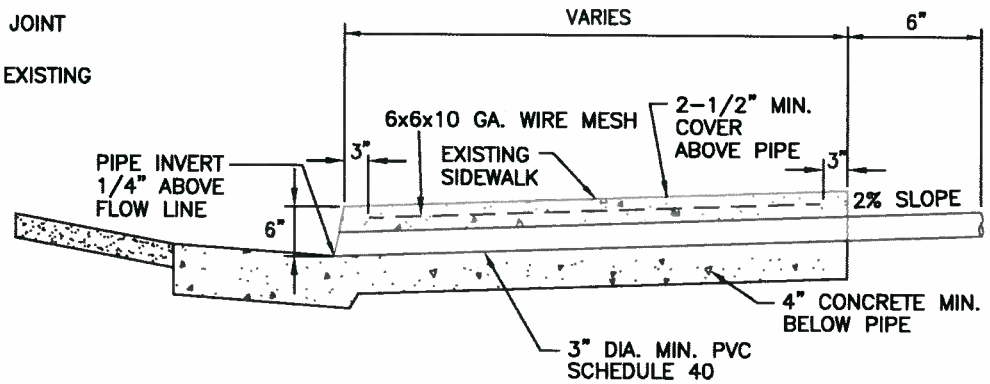

SECTION B-B

NOTES:

1. BROOM FINISH, UNLESS OTHERWISE DIRECTED
2. SAWCUT EXISTING SIDEWALK AT THE NEAREST WEAKENED PLANE JOINTS AND/OR SCORE LINES.
3. ADD WEAKENED PLANE JOINTS AND SCORE LINES PER STANDARD PLAN C-7.
4. USE OF CORING SUBJECT TO APPROVAL BY CITY ENGINEER.
5. PIPE MUST EXTEND TO FACE OF CURB.

San Ramon CALIFORNIA	CITY OF SAN RAMON	DRAWN BY: ELR	STANDARD DETAIL	APPROVED BY: DATE: 6/1/11
		CHECKED BY: ENGINEERING		Brian N. Bornstein CITY ENGINEER
	DETAIL SD-14	DATE: 05/20/11	SIDEWALK CROSS - DRAIN	SHT 1 of 1

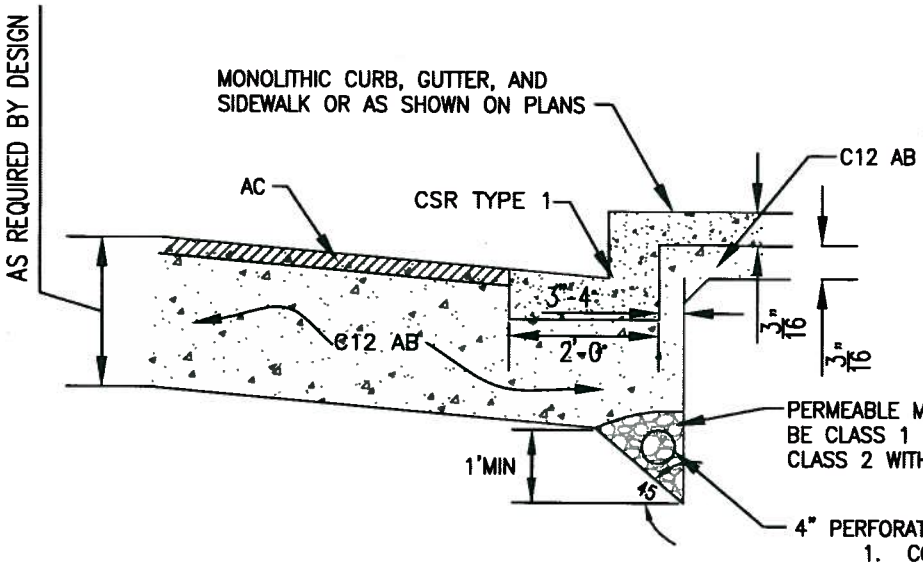

PERMEABLE MATERIAL SHALL EITHER BE CLASS 1 WITH FILTER FABRIC OR CLASS 2 WITHOUT FILTER FABRIC

4" PERFORATED PIPE WITH FABRIC WRAP

1. CONNECT TO EACH CATCH BASIN AS NECESSARY.
2. SUBDRAIN SHALL BE CONTINUOUS ALONG ENTIRE LENGTH OF STREETS.
3. SUBDRAIN FOR NEW DEVELOPMENT MAY REQUIRE SITE SPECIFIC DESIGN AND APPROVAL AS DIRECTED BY CITY ENGINEER

SUBDRAIN

N.T.S.

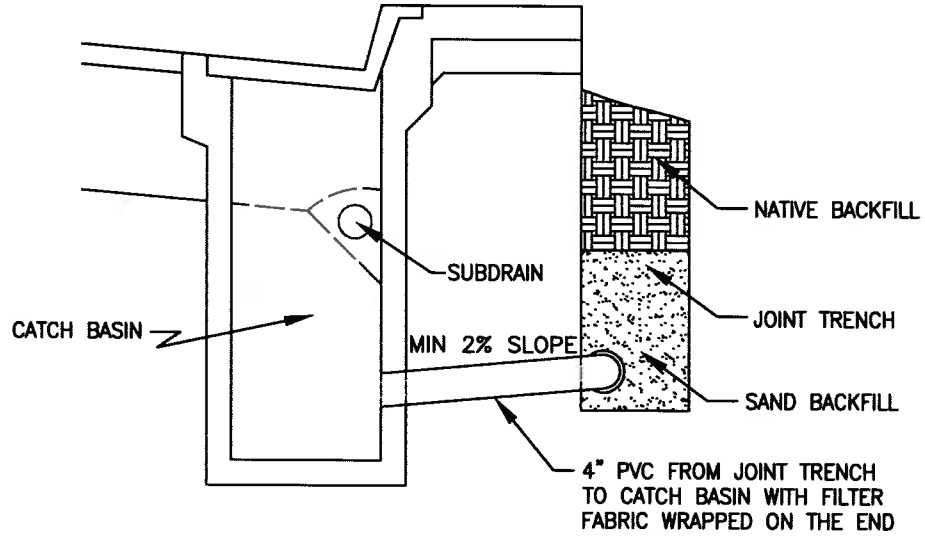

SUBDRAIN AT CATCH BASIN

N.T.S.

CITY OF SAN RAMON	DRAWN BY: ELR	STANDARD DETAIL	APPROVED BY: DATE: 6/1/11	
	CHECKED BY: ENGINEERING		Brian R Bornstein	
DETAIL SD-15	DATE: 05/20/11	ROADWAY SUB-DRAIN DETAIL	CITY ENGINEER	
			SHT 1 of 1	

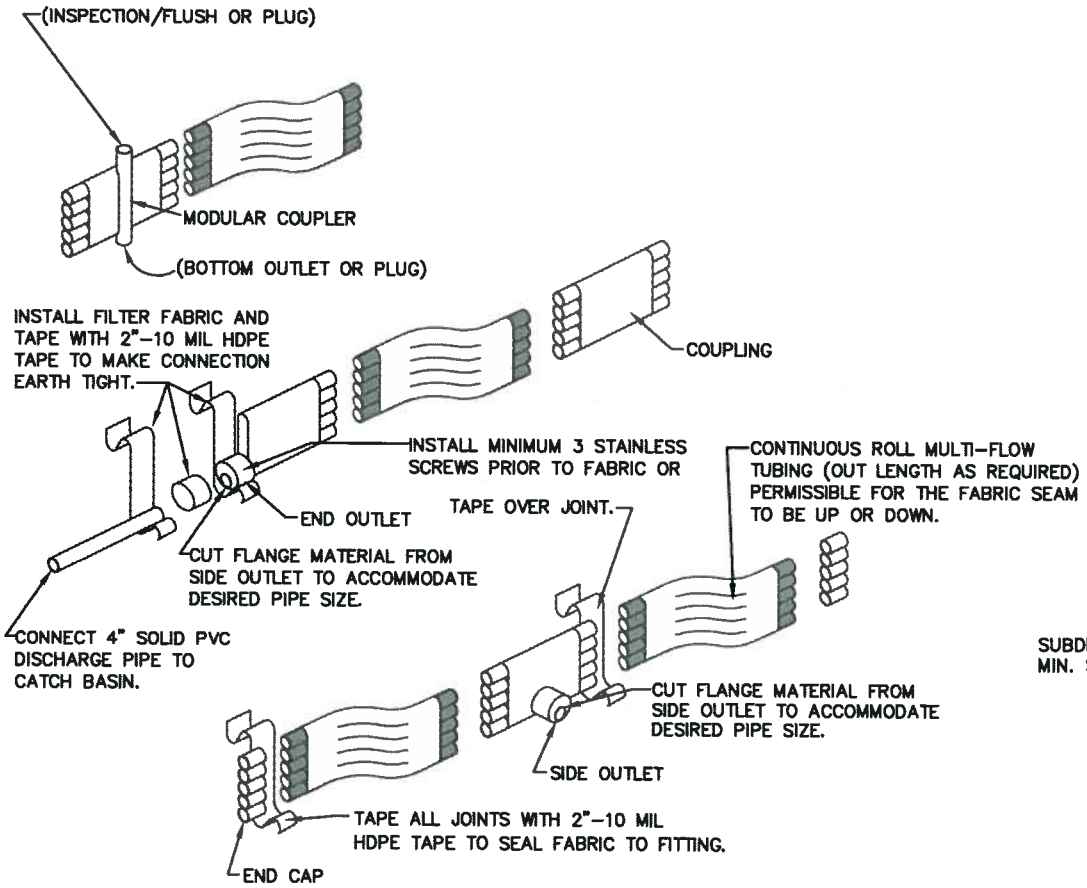

SUBDRAIN ASSEMBLIES
N.T.S.

NOTE:

PLACE CLOSED CORE STACKED TUBE GEOCOMPOSITE SUBDRAIN ON ROAD SIDE OF TRENCH AS SHOWN. CONNECT SUBDRAIN TO EXISTING CATCH BASINS WITH SOLID DISCHARGE PIPE.

SEE STANDARD DETAIL SD-15 FOR CONNECTION TO CATCH BASIN.

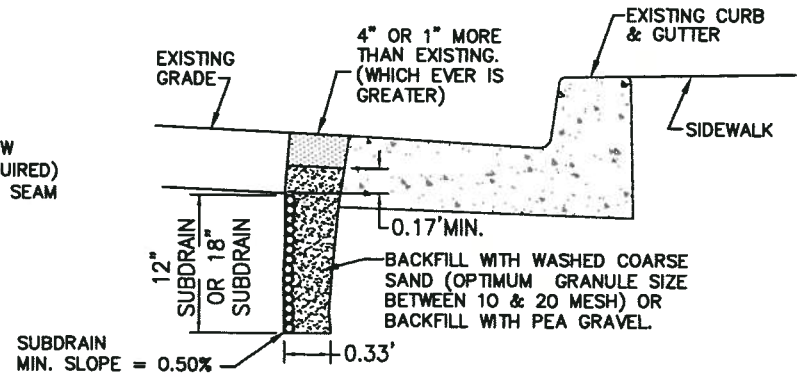

NOTE: BOTTOM OF SUBGRADE TO BE SET 3" BELOW PAVEMENT SUBGRADE.

SUBDRAIN AT LIP OF GUTTER
N.T.S.

NOTE:

ON NEW STREET INSTALLATIONS, INSTALL SUBDRAIN PRIOR TO PAVING. AC THICKNESS SAME AS STREET.

San Ramon CALIFORNIA INCORPORATED 1980	CITY OF SAN RAMON	DRAWN BY: ELR	STANDARD DETAIL	APPROVED BY: DATE: 6/1/11
		CHECKED BY: ENGINEERING		Brian R. Bornstein CITY ENGINEER
	DETAIL SD-16	DATE: 05/20/11	SUBDRAIN	SHT 1 of 1

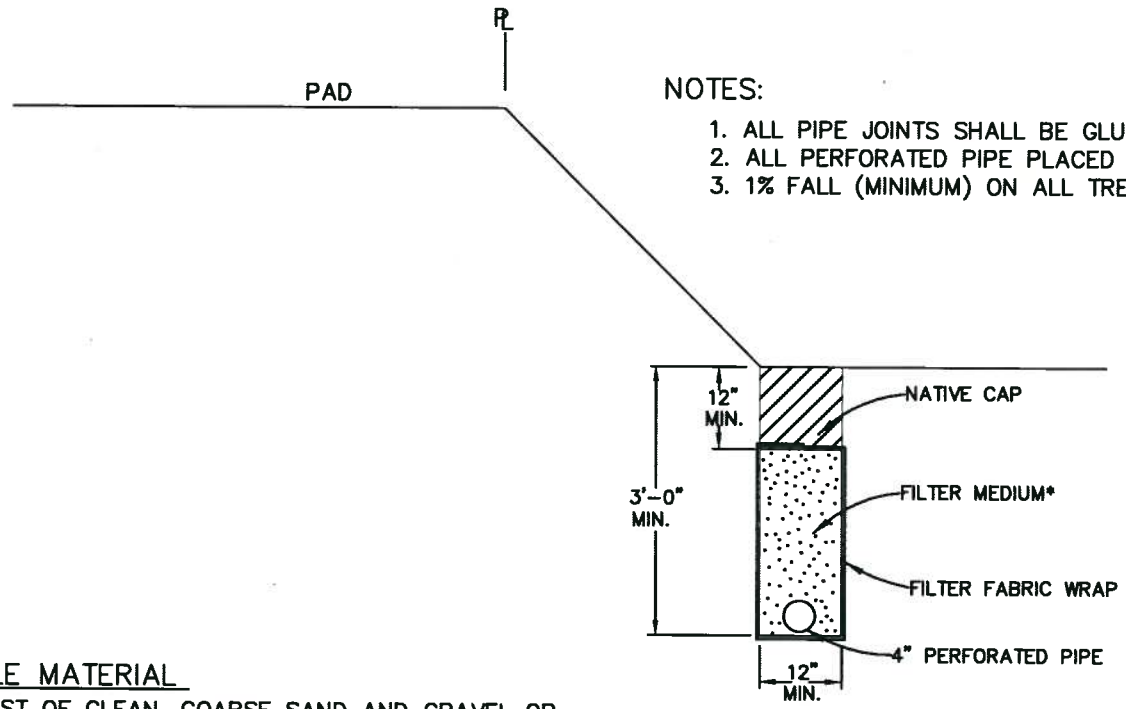

NOTES:

1. ALL PIPE JOINTS SHALL BE GLUED
2. ALL PERFORATED PIPE PLACED PERFORATIONS DOWN
3. 1% FALL (MINIMUM) ON ALL TRENCHES AND DRAIN LINES

*FILTER MEDIUM

CLASS 2 PERMEABLE MATERIAL

MATERIAL SHALL CONSIST OF CLEAN, COARSE SAND AND GRAVEL OR CRUSHED STONE, CONFORMING TO THE FOLLOWING GRADING REQUIREMENTS:

SIEVE SIZE	% PASSING SIEVE
1"	100
3/4"	90–100
3/8"	40–100
#4	25–40
#8	18–33
#30	5–15
#50	0–7
#200	0–3

NOT TO SCALE

San Ramon CALIFORNIA INCORPORATED 1983	CITY OF SAN RAMON	DRAWN BY; ELR	STANDARD DETAIL	APPROVED BY: DATE: 6/1/11
		CHECKED BY: ENGINEERING		Brian N Bandlein CITY ENGINEER
	DETAIL SD–17a	DATE: 05/20/11	TYPICAL TOE SUBDRAIN DETAIL–PIPE	SHT 1 of 3

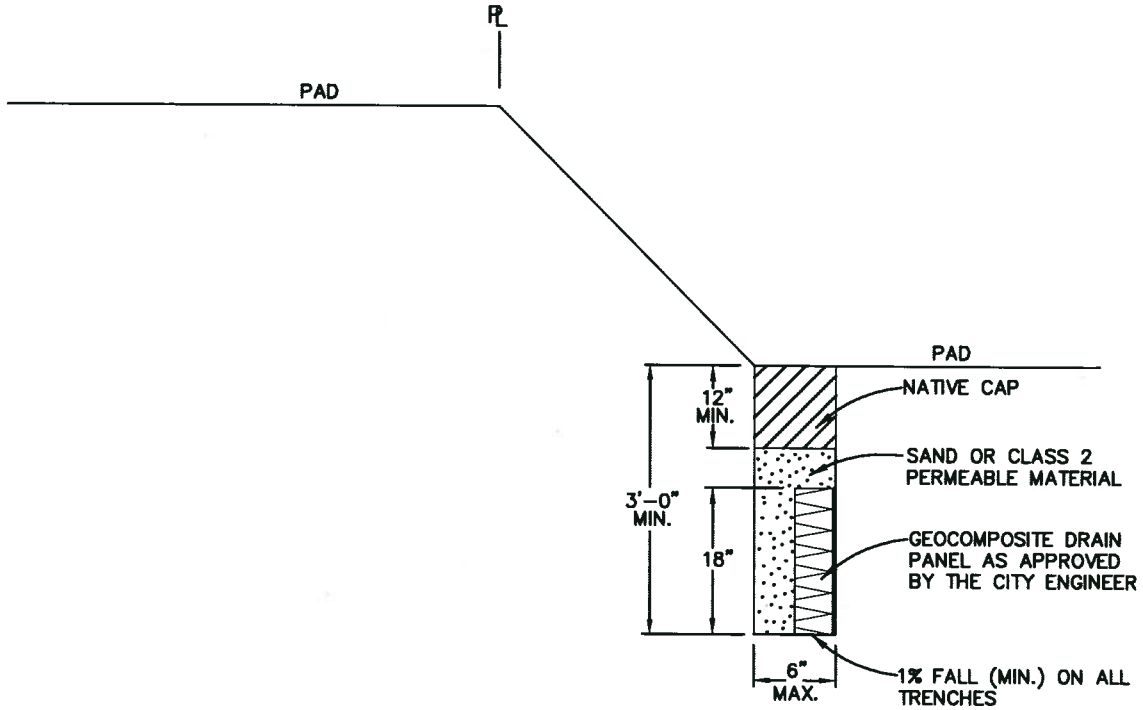

CLASS 2 PERMEABLE MATERIAL

MATERIAL SHALL CONSIST OF CLEAN, COARSE SAND AND GRAVEL OR CRUSHED STONE, CONFORMING TO THE FOLLOWING GRADING REQUIREMENTS:

SIEVE SIZE	% PASSING SIEVE
1"	100
3/4"	90–100
3/8"	40–100
#4	25–40
#8	18–33
#30	5–15
#50	0–7
#200	0–3

NOT TO SCALE

CITY OF SAN RAMON	DRAWN BY; ELR	STANDARD DETAIL	APPROVED BY: Brian N Bornstein DATE: 6/1/11 CITY ENGINEER	
	CHECKED BY: ENGINEERING			
DETAIL SD–17b	DATE: 05/20/11	TYPICAL TOE SUBDRAIN DETAIL – DRAIN PANEL	SHT 2 of 3	

NOTES:
1. ALL PIPE JOINTS SHALL BE GLUED
2. ALL PERFORATED PIPE PLACED PERFORATIONS DOWN
3. 1% FALL (MINIMUM) ON ALL TRENCHES AND DRAIN LINES
4. TOE SUBDRAIN TO BE INDEPENDENT OF POOL SUBDRAIN

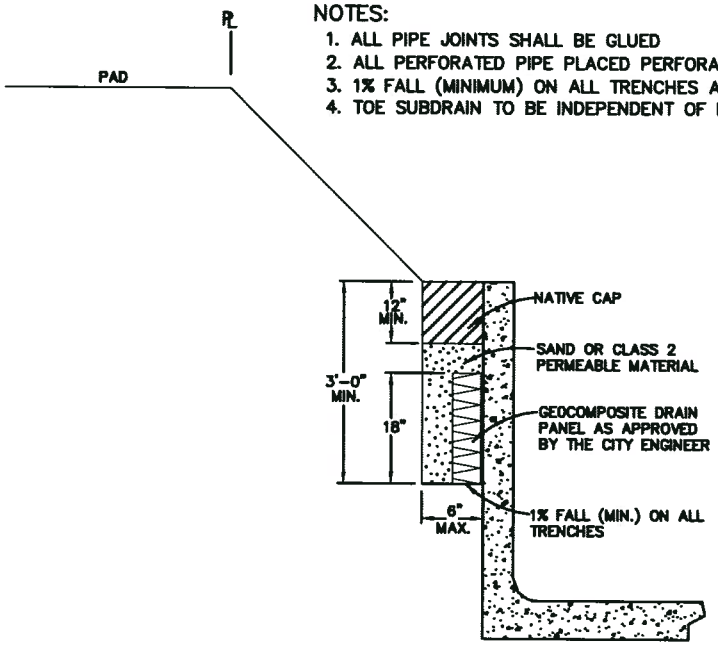

NOTES:
1. ALL PIPE JOINTS SHALL BE GLUED
2. ALL PERFORATED PIPE PLACED PERFORATIONS DOWN
3. 1% FALL (MINIMUM) ON ALL TRENCHES AND DRAIN LINES
4. TOE SUBDRAIN TO BE INDEPENDENT OF POOL SUBDRAIN

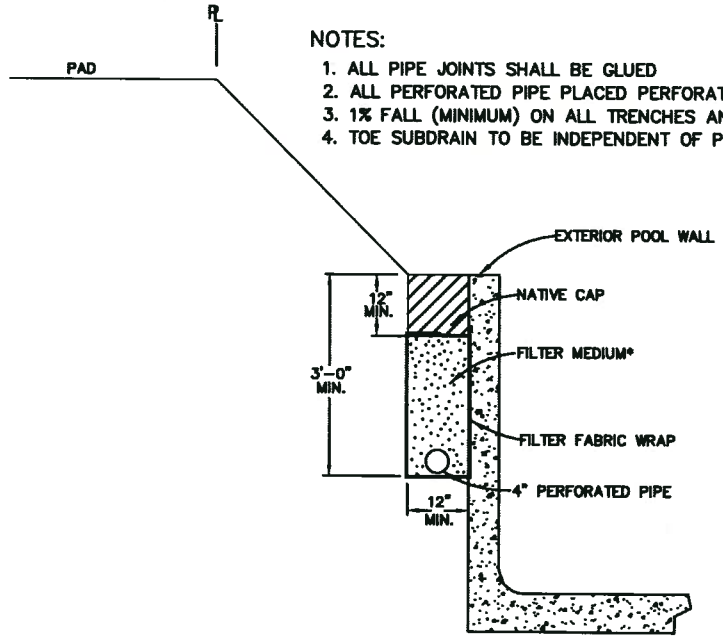

FILTER MEDIUM SHALL CONFORM TO THE REQUIREMENT OF CALTRANS CLASS 2 PERMEABLE MATERIAL UNLESS OTHERWISE APPROVED.

MATERIAL SHALL CONSIST OF CLEAN, COARSE SAND AND GRAVEL OR CRUSHED STONE, CONFORMING TO THE FOLLOWING GRADING REQUIREMENTS:

SIEVE SIZE	% PASSING SIEVE
1"	100
3/4"	90–100
3/8"	40–100
#4	25–40
#8	18–33
#30	5–15
#50	0–7
#200	0–3

NOT TO SCALE

San Ramon CALIFORNIA INCORPORATED 1980	CITY OF SAN RAMON	DRAWN BY; ELR	STANDARD DETAIL	APPROVED BY: DATE: 6/1/11 Brian N Bornstein CITY ENGINEER
		CHECKED BY: ENG'G., PS		
	DETAIL SD–17c	DATE: 05/20/11	TYPICAL TOE SUBDRAIN DETAIL–POOL	SHT 3 of 3