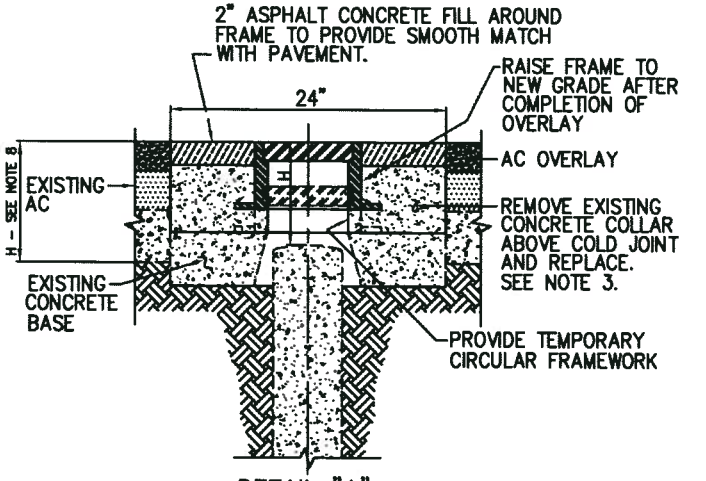

DETAIL "A"
FRAME ADJUSTMENT

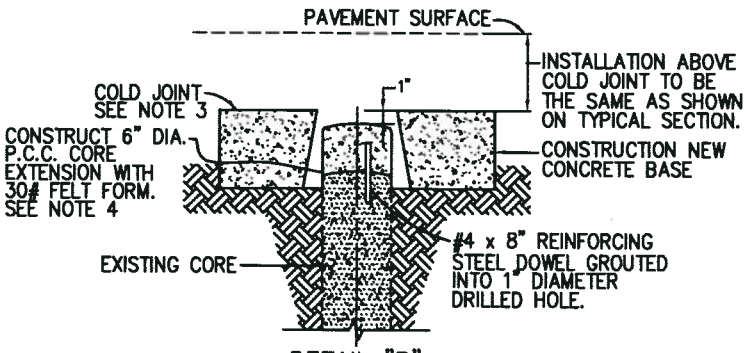

DETAIL "B"
CORE EXTENSION

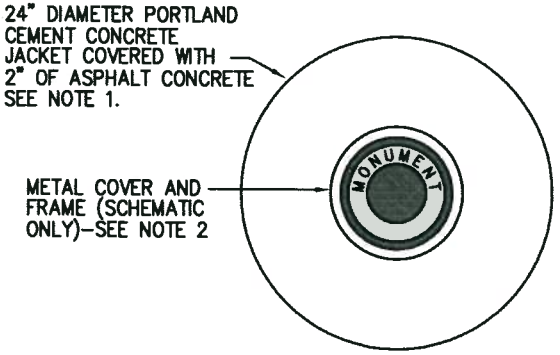

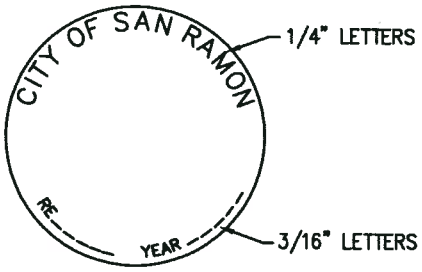

TOP
NTS

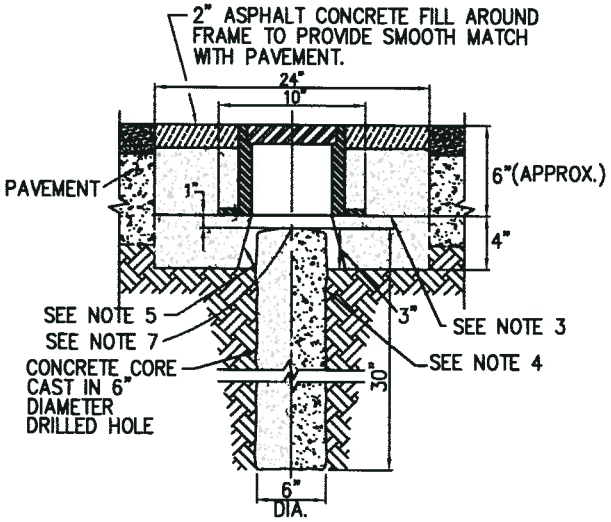

TYPICAL SECTION
ORIGINAL INSTALLATION

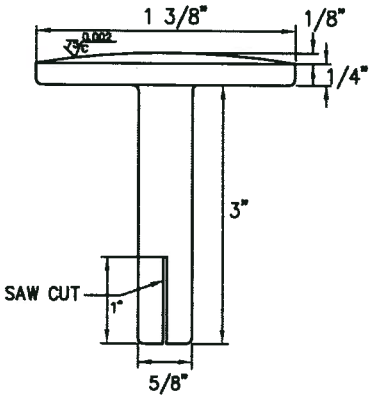

SECTION
NTS
MONUMENT DISK
NTS

NOTES:

1. PORTLAND CEMENT CONCRETE FOR JACKET AND CORE SHALL BE CLASS 1 PER CURRENT CALTRANS SPECIFICATIONS. ASPHALT CONCRETE SHALL BE TYPE B 1/2" MAX. - MED. GRADING.
2. APPROVED COVERS AND FRAMES ARE THOSE MANUFACTURED BY FORNI CORP. ("IRONSIDES"). AMERICAN BRASS AND IRON FOUNDRY, AND MONROE CASTING. OTHER TYPES MUST BE APPROVED BY THE CITY ENGINEER. COVERS SHALL BE MARKED "MONUMENT", SHALL BE NON-ROCKING, & DESIGNED FOR A 16,000 POUND WHEEL LOAD.
3. 30# FELT TO CREATE A "COLD JOINT".
4. 6" DIAMETER COLLAR FORMED WITH 30# FELT, 1" BELOW "COLD JOINT".
5. TAPERED METAL CONE OR 3/32" MINIMUM CHIPBOARD CONE.
6. SOLID BRASS MARKER (1 3/8" DIAMETER TOP AND 5/8" x 3" SHANK) WITH DISTINCTIVE PUNCH AND R.E. OR L.S. NUMBER.
7. ADJUSTMENT RINGS (NOT SHOWN) ARE AVAILABLE FOR BOTH TYPES OF FRAMES. MAXIMUM HEIGHT OF ADJUSTMENT BY RINGS: 2" FOR FORNI FRAME, 3" FOR A.B. AND I. FRAME.
   WHEN REQUIRED ADJUSTMENT EXCEEDS ABOVE LIMITS, THE FRAME SHALL BE RAISED TO CONFORM TO THE NEW PAVEMENT SURFACE AS SHOWN IN DETAIL "A".
8. WHEN DIMENSION "H" FROM TOP OF FRAME TO TOP OF CONCRETE CORE (SEE DETAIL "A") EXCEEDS 12", THE CORE SHALL BE EXTENDED AS SHOWN IN DETAIL "B".
9. ALL LETTERING TO BE STAMPED 1/16" DEEP.
10. ALL FILLETS AND ROUNDS TO BE 1/16" RADIUS.

San Ramon CALIFORNIA INCORPORATED 1983	CITY OF SAN RAMON	DRAWN BY: ELR	STANDARD DETAIL	APPROVED BY: DATE: 6/1/11
		CHECKED BY: ENG'G., PS		Brian A Bornstein CITY ENGINEER
	DETAIL R-1	DATE: 05/20/11	STREET SURVEY MONUMENT	SHT 1 of 1

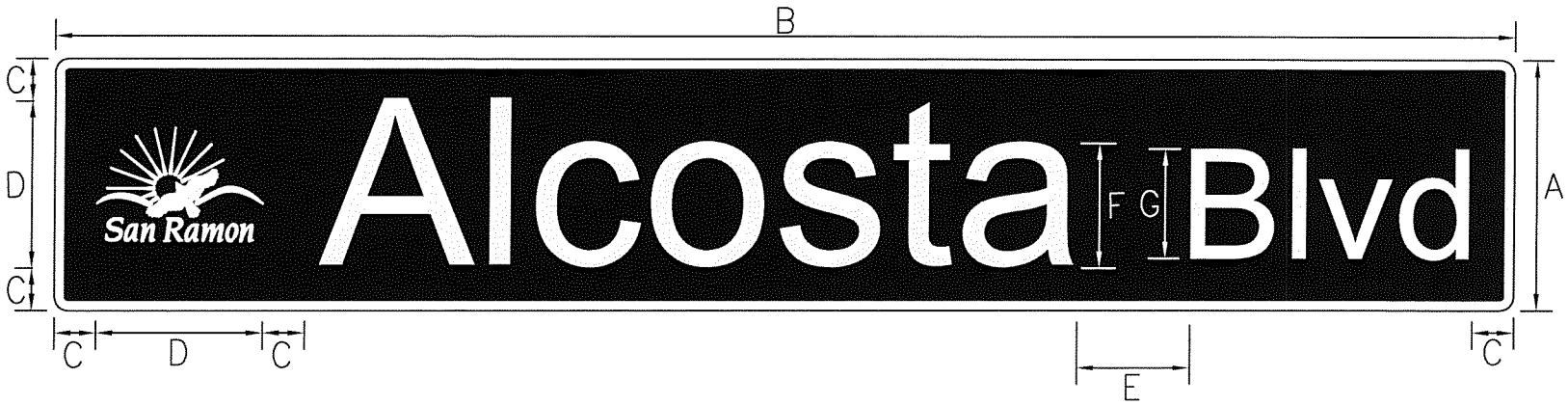

A	B	C	D	E	F	G
9"	30", 36", or 42" with 1/2" corner radius	1.5"	6"	>=1.5"	4.5"	4"

Type of Letter	Size	Letter Style
Name of Street (th, nd, st, etc)	6" Uppercase, 4.5" Lowercase	Highway Gothic 'B'
Type of Street (Dr, Ave, St, etc)	3" Uppercase, 2.25" Lowercase	Highway Gothic 'B'
N (north), W(west), etc	3" Uppercase	Highway Gothic 'B'
Logo Size	6" X 6" Max.	N/A

Description	Material Types	Required Min. Retroreflectivity	Thickness of Material/Size
Sign Blank Material	Aluminum Alloy	N/A	0.080 gauge
Border Color	3M #3930 White High Intensity Prismatic	Per MUTCD	3/8"
Background Color	Nikkalite 106 Blue ESM Overlay	Per MUTCD	N/A
Lettering Color	3M #3930 White High Intensity Prismatic	Per MUTCD	See table above
Logo Color	3M #3930 White High Intensity Prismatic	Per MUTCD	See table above

San Ramon CALIFORNIA INCORPORATED 1983	CITY OF SAN RAMON	DRAWN BY: ELR / DF	STANDARD DETAIL	APPROVED BY: DATE: 11-14-12
		CHECKED BY: ENG'G., PS		Brian R Bornstein CITY ENGINEER
	DETAIL R-2a	DATE: 10/31/12	STREET NAME SIGN – PUBLIC	SHT 1 of 2

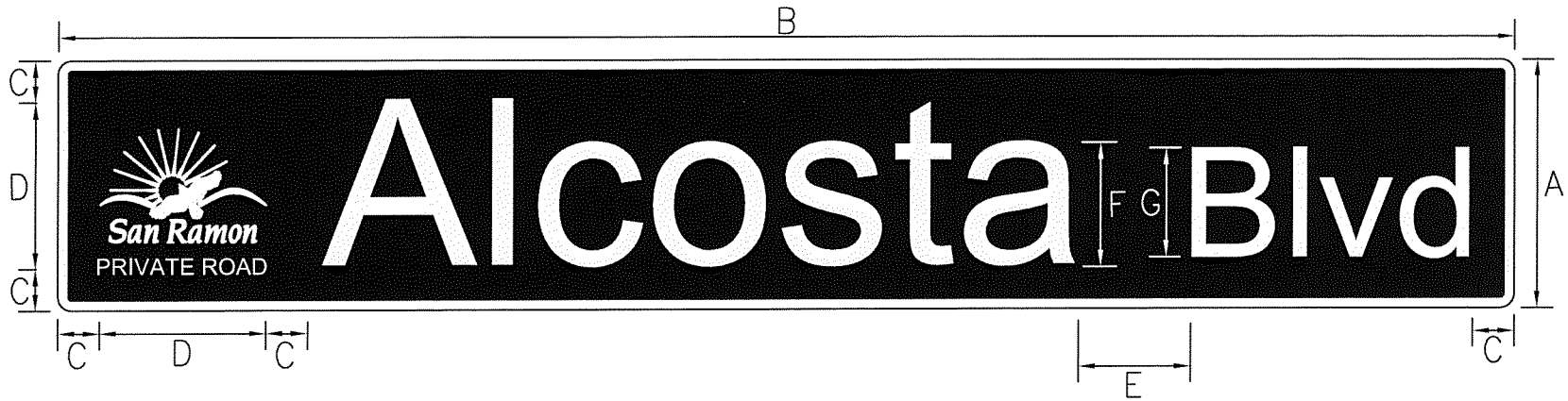

A	B	C	D	E	F	G
9"	30", 36", or 42" with 1/2" corner radius	1.5"	6"	>=1.5"	4.5"	4"

Type of Letter	Size	Letter Style
Name of Street (th, nd, st, etc)	6" Uppercase, 4.5" Lowercase	Highway Gothic 'B'
Type of Street (Dr, Ave, St, etc)	3" Uppercase, 2.25" Lowercase	Highway Gothic 'B'
N (north), W(west), etc	3" Uppercase	Highway Gothic 'B'
Logo Size	6" X 6" Max.	Highway Gothic 'B'
PRIVATE ROAD	5/8" Tall, Center Below Logo	Highway Gothic 'B'

Description	Material Types	Required Min. Retroreflectivity	Thickness of Material/Size
Sign Blank Material	Aluminum Alloy	N/A	0.080 gauge
Border Color	3M #3930 White High Intensity Prismatic	Per MUTCD	3/8"
Background Color	Nikkalite 106 Blue ESM Overlay	Per MUTCD	N/A
Lettering Color	3M #3930 White High Intensity Prismatic	Per MUTCD	See table above
Logo Color	3M #3930 White High Intensity Prismatic	Per MUTCD	See table above

San Ramon CALIFORNIA INCORPORATED 1983	CITY OF SAN RAMON	DRAWN BY: ELR / DF	STANDARD DETAIL	APPROVED BY: DATE: 11-14-12
		CHECKED BY: ENG'G., PS		CITY ENGINEER
	DETAIL R-2b	DATE: 10/31/12	STREET NAME SIGN – PRIVATE	SHT 2 of 2

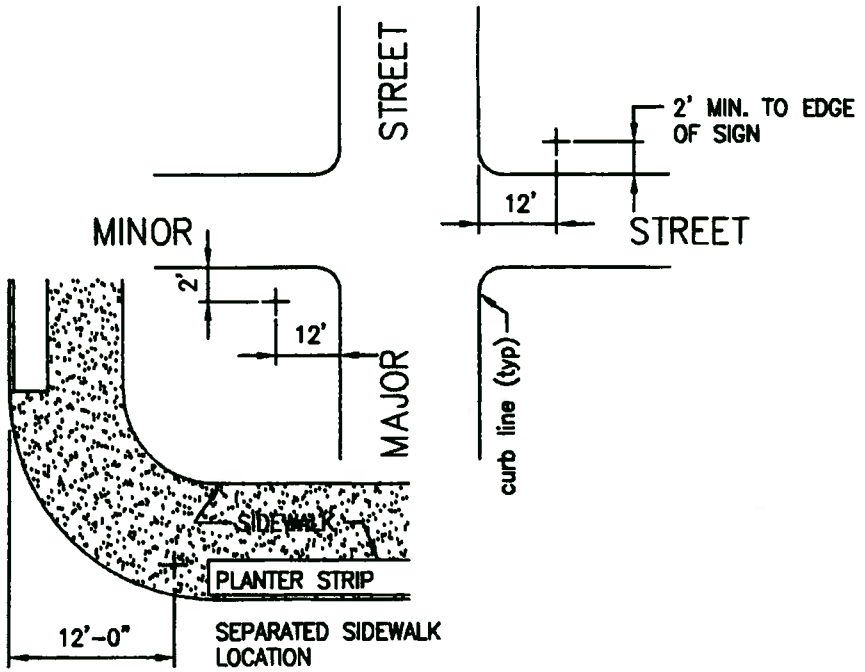

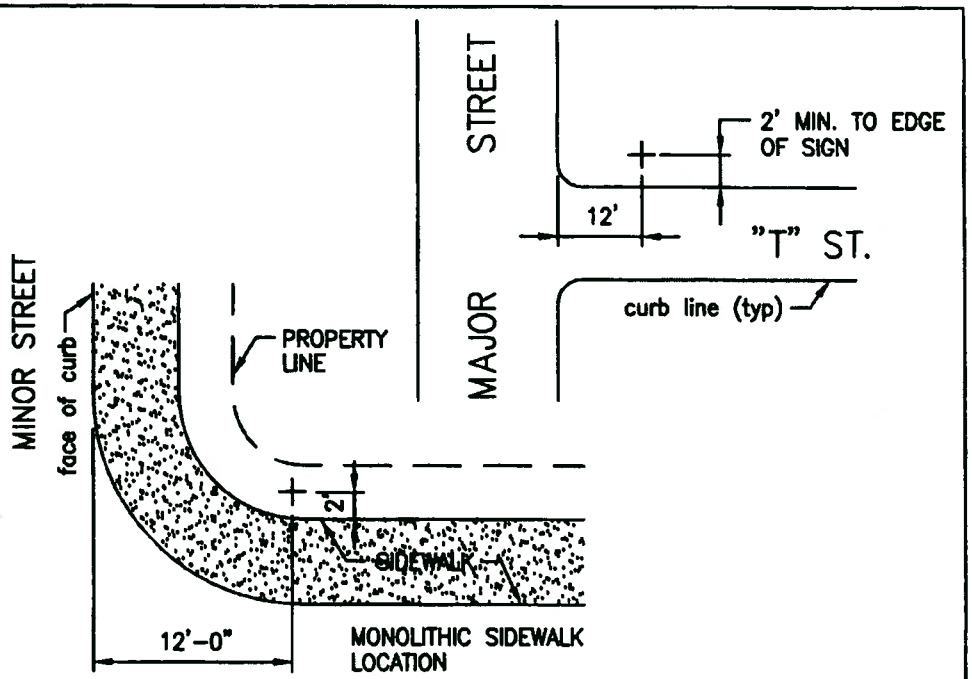

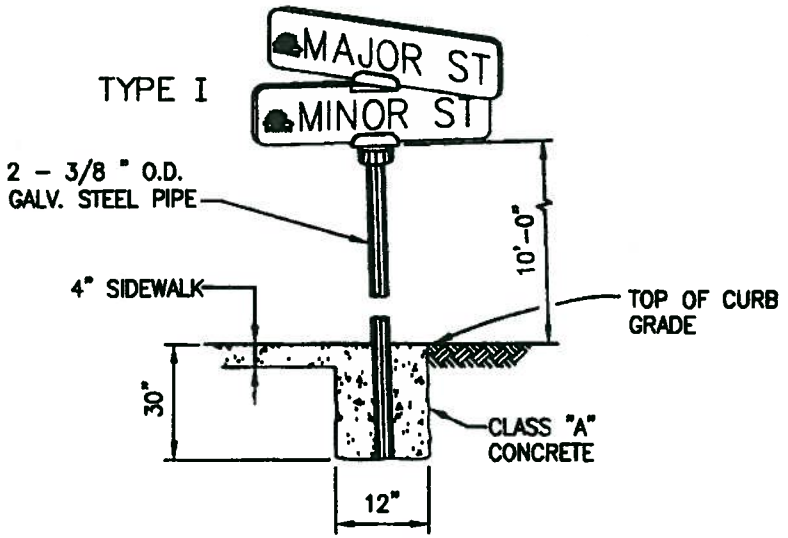

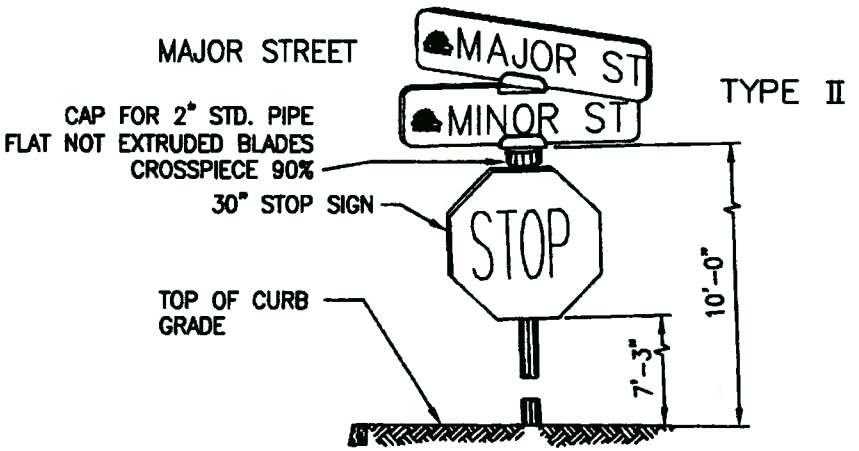

CITY OF SAN RAMON	DRAWN BY: AA & AH	STANDARD DETAIL	APPROVED BY: DATE: 9/18/01	
	CHECKED BY: ENGINEERING		CITY ENGINEER	
DETAIL R-3	DATE: 10/26/00	STREET NAME SIGN LOCATION	SHT 1 of 1	

G:\STANDARD DRAWINGS\2000R-3

SINGLE CLAMP ON U-BRACKET

FOR 2" or 2 1/2" I.D. STANDARD

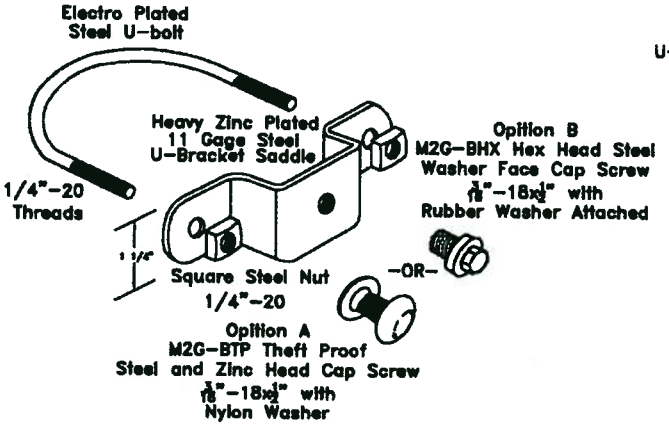

SINGLE "STEAL-PROOF" CLAMP ON U-BRACKET

FOR 2" or 2 1/2" I.D. STANDARD

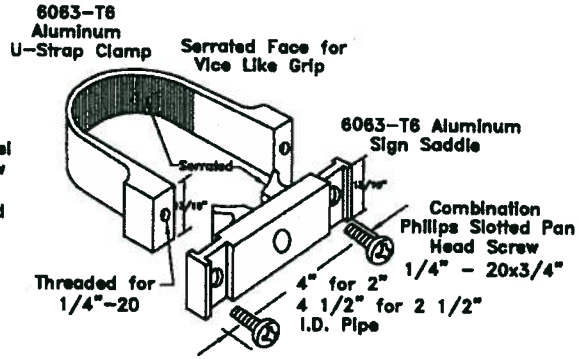

CYLINDRICAL POST CAPS

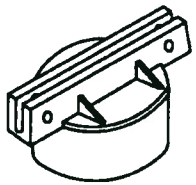

Western Highway Products
Product # 808F-2 for AF-9 signs

NOTE:
Post caps are recommended for "Single Top of Pole" or "Four-Way Top of Pole" configurations of blade street signs.

SIGN TO SIGN BRACKET

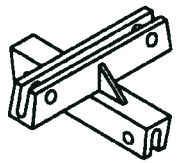

Western Highway Products
Product # 808FCS for AF-9 signs

NOTE:
Bracket allows two blade signs to stack on top of one another.

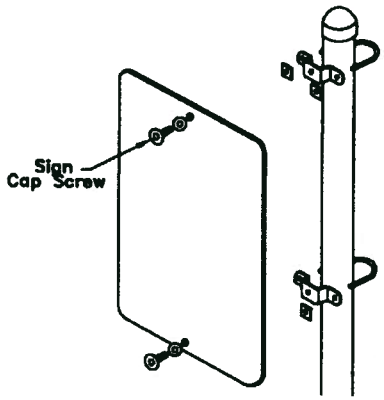

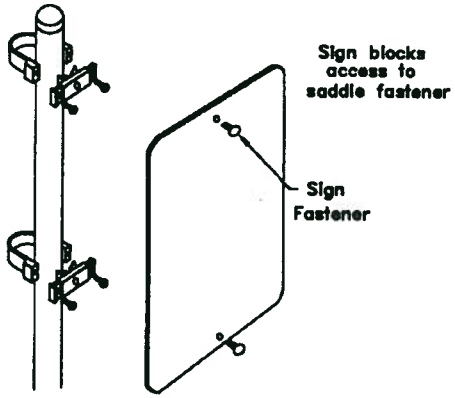

FOR 2" OR 2 1/2" I.D. PIPE POST

ELECTROLIER MOUNT DETAIL FOR DOUBLE FACED SIGNS

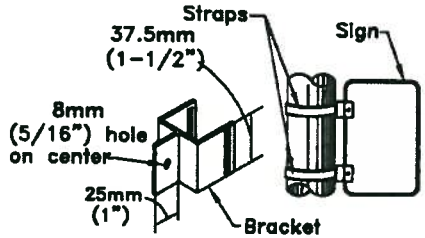

ELECTROLIER MOUNT DETAIL

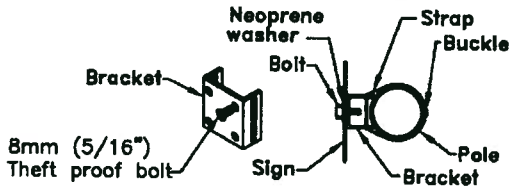

SIGN CAP SCREW SET OPTIONS

Option A	Option B	To Fit
M2G-C2B-TP	M2G-C2B	2" I.D. Pipe
M2G-C2.5B-TP	M2G-C2.5B	2 1/2" I.D. Pipe

SIGN FASTENER SET OPTIONS

Set to 2" I.D. Pipe	Set to 2 1/2" I.D. Pipe
M2G-C2SPB-TP	M2G-C2.5SPB-TP
M2G-C2SPB	M2G-C2.5SPB
M2G-C2SPB-VPN	M2G-C2.5SPB-VPN
M2G-C2SPB-HN	M2G-C2.5SPB-HN

NOT TO SCALE

CITY OF SAN RAMON	DRAWN BY: ELR	STANDARD DETAIL	APPROVED BY: DATE: 6/15/09	
	CHECKED BY: ENG'G., PS		CITY ENGINEER	
DETAIL R-4	DATE: 12/08/08	STREET NAME AND SIGN MOUNTING DETAIL	SHT 1 of 1	

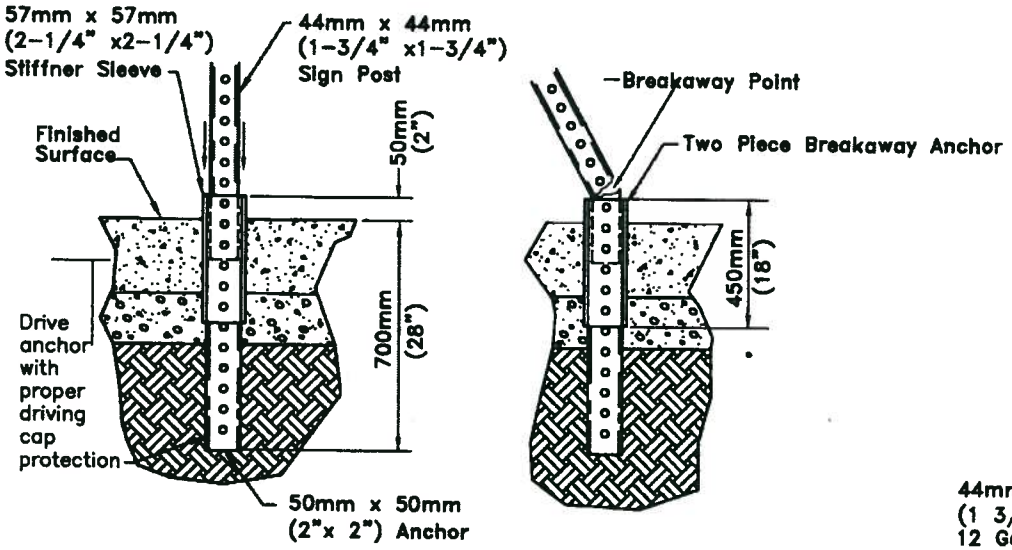

FOOTING DETAIL

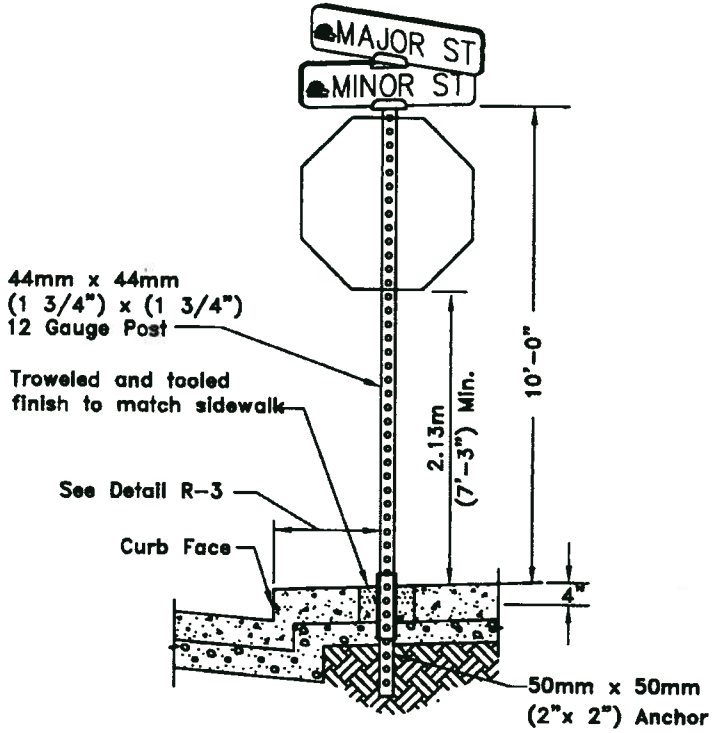

SIGN POST DETAIL

FOR SINGLE FACE SIGNS

1. Use Qwik Punch Unistrut Telespar System or approved equal.
2. Use Two Piece Breakaway Anchors 12 gauge Telespar tubing.
3. All sign locations shall be approved by a Traffic Engineer.
4. Fasten signs to posts with Telespar Drive Rivets or approved equal.
5. Posts shall be pre-galvanized per ASTM A-525 coating designation G90.
6. Core drill sidewalk or remove complete sidewalk panel.
7. Use Hot Dipped Galvanized or SS bolts and hardware. Do not over torque bolts.

CITY OF SAN RAMON	DRAWN BY: ELR	STANDARD DETAIL	APPROVED BY: DATE: 6/15/09	
	CHECKED BY: ENG'G., PS		CITY ENGINEER	
DETAIL R-5	DATE: 12/08/08	SIGN BREAKAWAY POST INSTALLATION	SHT 1 of 1	

TRAFFIC STRIPES, ARROWS, PAVEMENT MESSAGE MARKINGS AND LEGENDS SHALL CONFORM TO THE CURRENT STANDARDS AND DIMENSIONS OF SECTION 84 OF THE CALTRANS STANDARD SPECIFICATIONS AND SHALL BE INSTALLED PER THE APPROVED TRAFFIC CONTROL PLANS OR BY THE CITY TRAFFIC ENGINEER.

ALL TRAFFIC STRIPES, MARKINGS, AND LEGENDS SHALL BE THERMOPLASTIC UNLESS THE PLANS DESIGNATE THE USE OF "TRAFFIC PAINT" OR RAISED PAVEMENT MARKERS.

PRIOR TO PLACING THE THERMOPLASTIC ALL, DIRT, OIL, GREASE PAINTED STRIPES AND PAVEMENT MARKINGS SHALL BE REMOVED AS DIRECTED BY THE ENGINEER.

ALL MATERIALS REQUIRED TO INSTALL THE STRIPES, MARKERS, AND LEGENDS SHALL BE FURNISHED BY THE CONTRACTOR.

ALL TRAFFIC STRIPES, MARKINGS AND LEGENDS SHALL BE REFLECTORIZED WITH GLASS BEADS.

ADVANCE SPOTTING FOR THE LOCATION OF ALL TRAFFIC STRIPES, MARKINGS AND LEGENDS SHALL BE PERFORMED BY THE CONTRACTOR. INSTALLATION OF THE STRIPING SHALL NOT BE COMMENCED UNTIL THE LOCATION AND ALIGNMENT OF THE ADVANCE SPOTTING HAS BEEN APPROVED BY THE CITY ENGINEER.

EXCEPTIONS TO THE THERMOPLASTIC REQUIREMENT ARE AS FOLLOWS:

1. BIKE LANES AND BIKE LANE PAVEMENT MARKINGS SHALL CONTINUE TO BE PAINTED AS CURRENTLY SPECIFIED, UNLESS THERMOPLASTIC IS SKID RESISTANT.
2. RAISED PAVEMENT MARKERS (RPM'S) SHALL CONTINUE TO BE USED FOR LANE DELINEATION AS CURRENTLY SPECIFIED PER CALTRANS STANDARD SPECIFICATIONS.
3. CROSSWALKS SHALL CONSIST OF SOLID THERMOPLASTIC STRIPES. ANY "ZEBRA STRIPING" BETWEEN THE BORDERS SHALL BE PAINTED.
4. IF CONSTRUCTION IS PHASED PROJECT AND MARKINGS OF DELINEATIONS ARE TEMPORARY.

SAN RAMON CALIFORNIA	CITY OF SAN RAMON	DRAWN BY: ELR	STANDARD DETAIL	APPROVED BY: DATE: 6/15/09
		CHECKED BY: ENG'G., PS		CITY ENGINEER
	DETAIL R-6	DATE: 12/30/08	STRIPING DETAIL	SHT 1 of 1

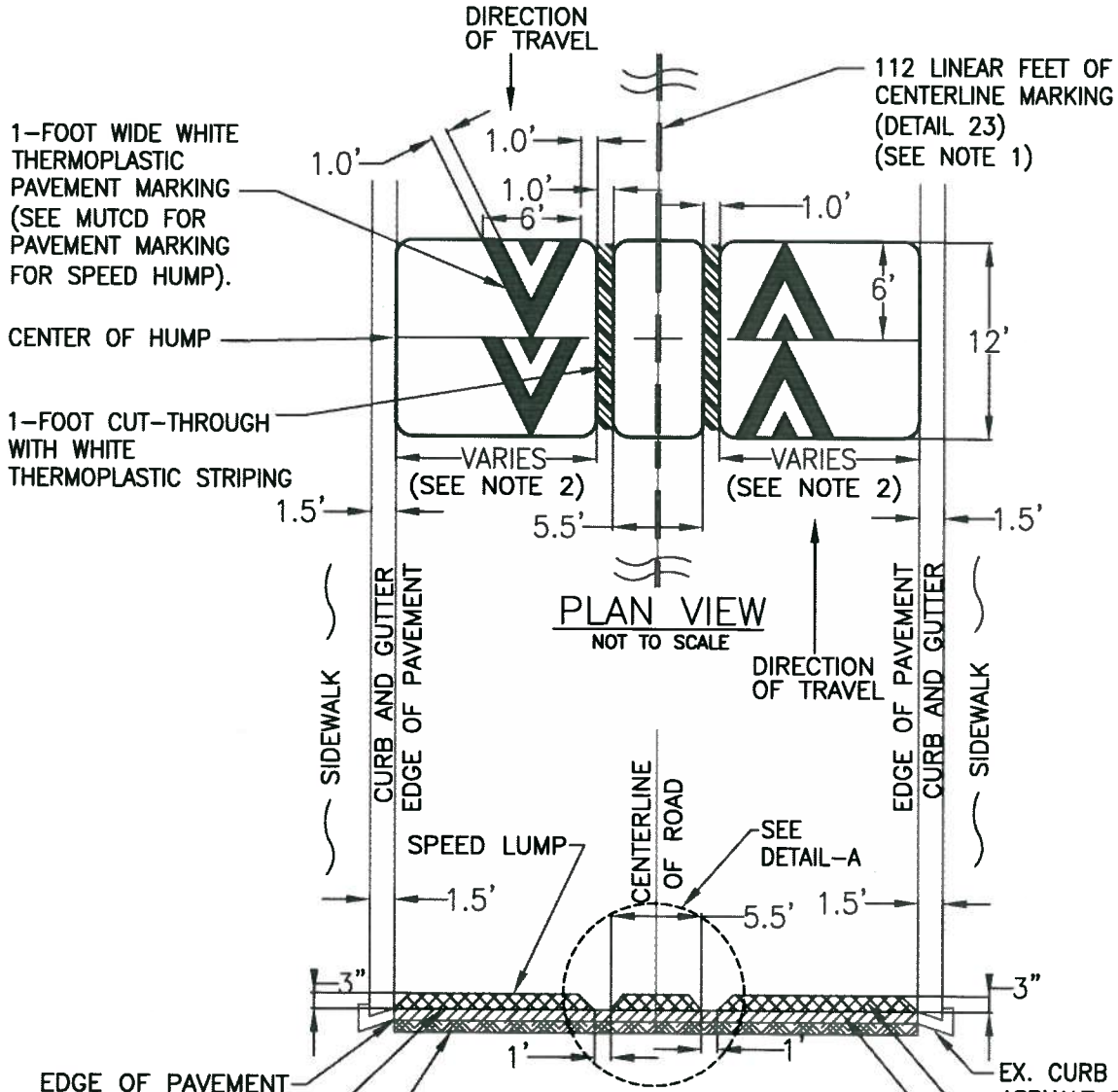

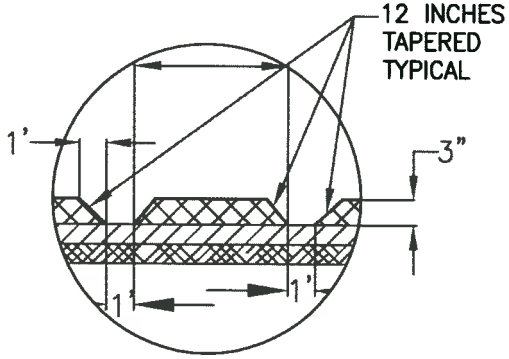

DETAIL-A
NOT TO SCALE

NOTES:

1. 50' OF CENTERLINE MARKING (DETAIL-23) ON EACH SIDE OF THE SPEED LUMP AND 12' ON TOP OF THE SPEED LUMP.
2. AVERAGE WIDTH OF STREET IS LESS THAN 34' EXCLUDING THE CURB AND GUTTER.
3. MINIMUM STREET WIDTH OF 23.5' EXCLUDING THE CURB AND GUTTER.

San Ramon CALIFORNIA INCORPORATED 1983	CITY OF SAN RAMON	DRAWN BY: ELR, DF	STANDARD DETAIL	APPROVED BY: DATE: 6/1/11
		CHECKED BY: ENG'G.,PUBL.SV.		CITY ENGINEER
	DETAIL R-7a	DATE: 05/20/11	SPEED LUMP < 34' WIDE	SHT 1 of 4

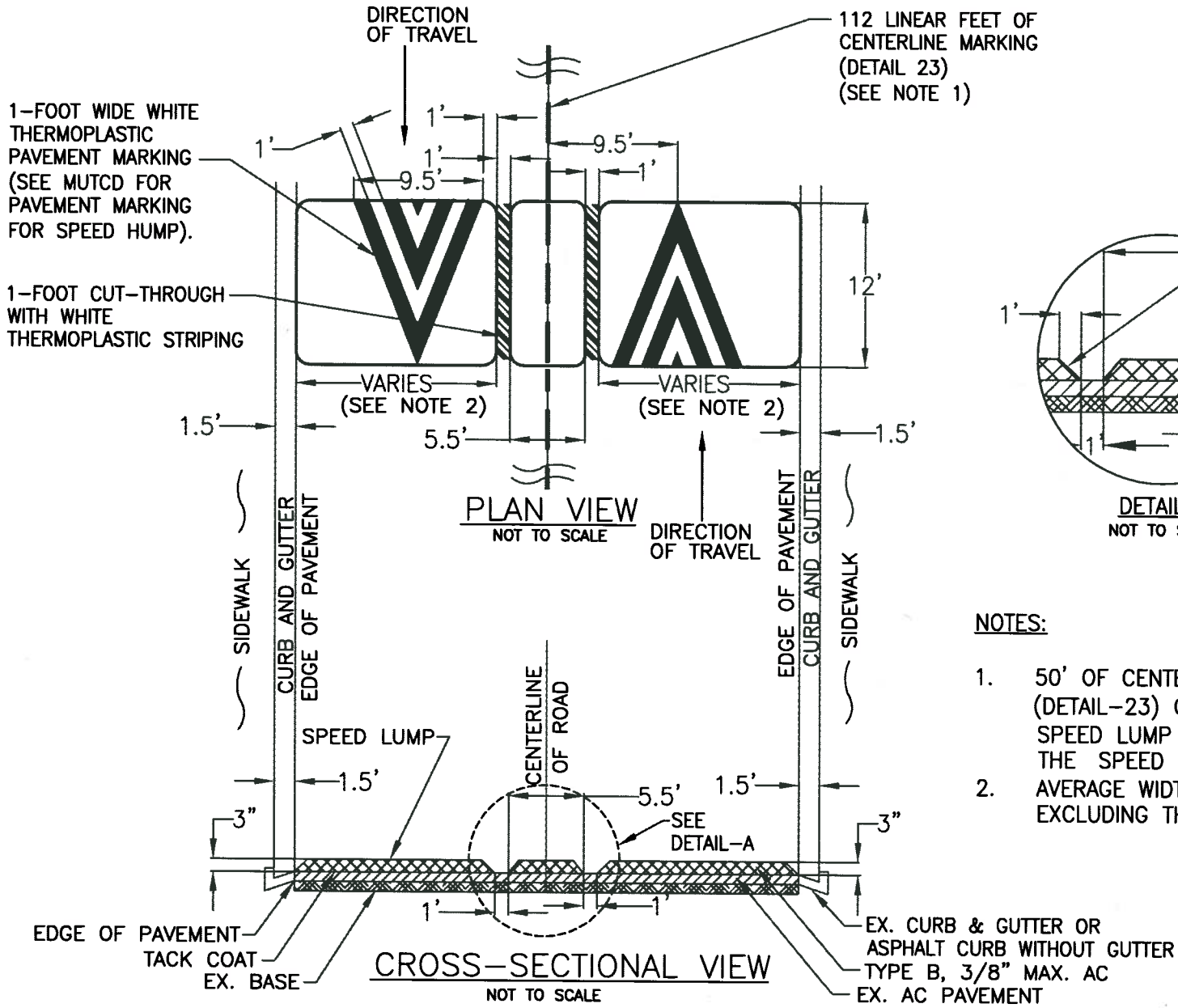

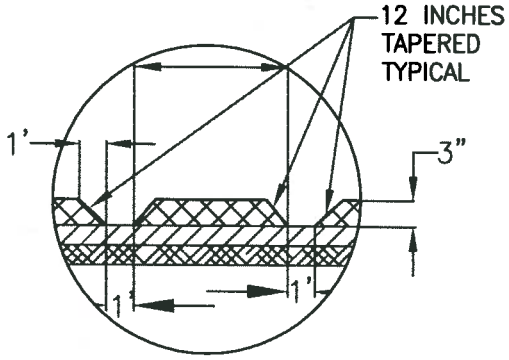

DETAIL-A
NOT TO SCALE

NOTES:

1. 50' OF CENTERLINE MARKING (DETAIL-23) ON EACH SIDE OF THE SPEED LUMP AND 12' ON TOP OF THE SPEED LUMP.
2. AVERAGE WIDTH OF STREET IS 34' EXCLUDING THE CURB AND GUTTER.

San Ramon CALIFORNIA INCORPORATED 1980	CITY OF SAN RAMON	DRAWN BY: ELR	STANDARD DETAIL	APPROVED BY: DATE: 6/1/11
		CHECKED BY: ENG'G.,PUBL.SV.		Brian R Bonte CITY ENGINEER
	DETAIL R-7b	DATE: 05/20/11	SPEED LUMP > 34' WIDE	SHT 2 of 4

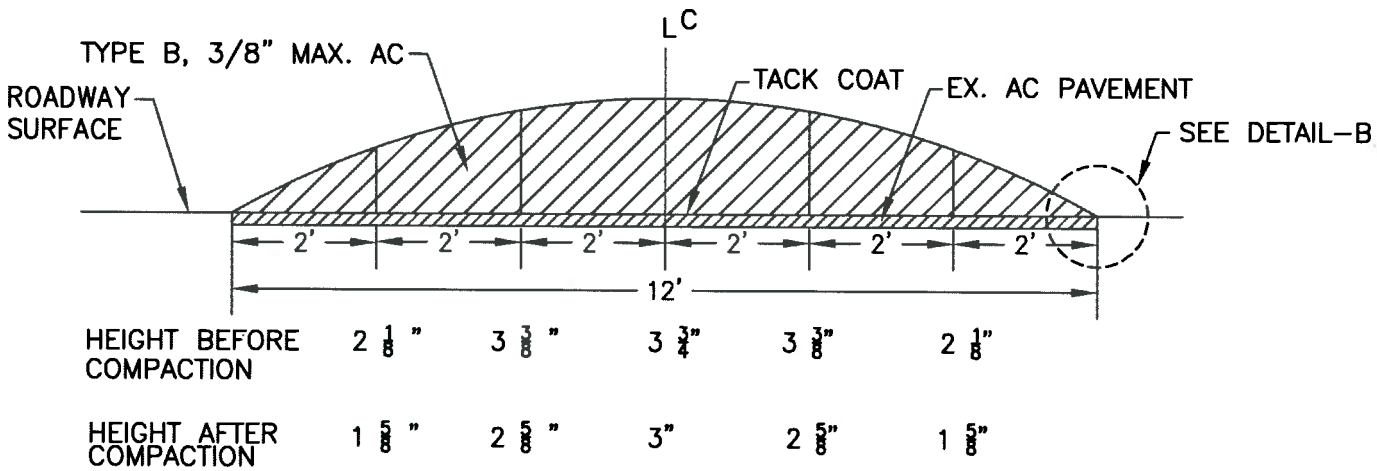

TYPICAL PROFILE

NOT TO SCALE

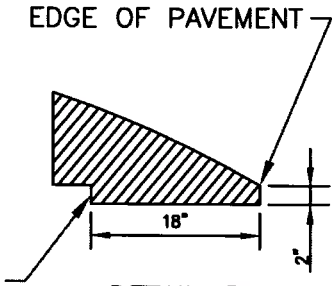

EXCAVATE AND FILL WITH ASPHALT 18" WIDE X 2" DEEP X 12' LONG PAVEMENT SECTION ALONG THE EDGE OF SPEED LUMP (BOTH SIDES)

DETAIL–B

NOT TO SCALE

SIGN ADJACENT TO SPEED LUMP
(IN BOTH DIRECTIONS)

ADVANCED WARNING SIGN
(IN BOTH DIRECTIONS)

NOTES:

1. USE HIP (HIGH INTENSITY PRISMATIC) GRADE SIGNS.
2. SIGNS SHALL BE PLACED ONTO THE NEXT ELECTROLIER POLE AT LEAST 200 FEET IN ADVANCE OF THE SPEED LUMP. IF NO ELECTROLIER POLE IS AVAILABLE USE THE CITY OF SAN RAMON STANDARD DETAILS FOR THE INSTALLATION OF SIGN POSTS (DETAIL R–5).
3. SEE MANUAL ON UNIFORM TRAFFIC CONTROL DEVICES (MUTCD) AND MUTCD CALIFORNIA SUPPLEMENT FOR SIGN DETAILS.

San Ramon CALIFORNIA INCORPORATED 1983	CITY OF SAN RAMON	DRAWN BY: ELR	STANDARD DETAIL	APPROVED BY: DATE: 6/1/11
		CHECKED BY: ENG'G.,PUBL.SV.		Brian K Bornstein CITY ENGINEER
	DETAIL R–7c	DATE: 05/20/11	SPEED LUMP	SHT 3 of 4

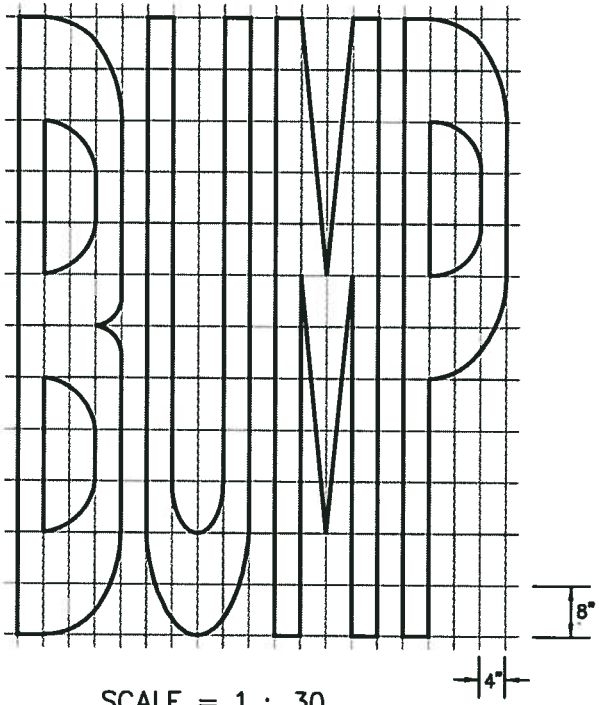

SCALE = 1 : 30

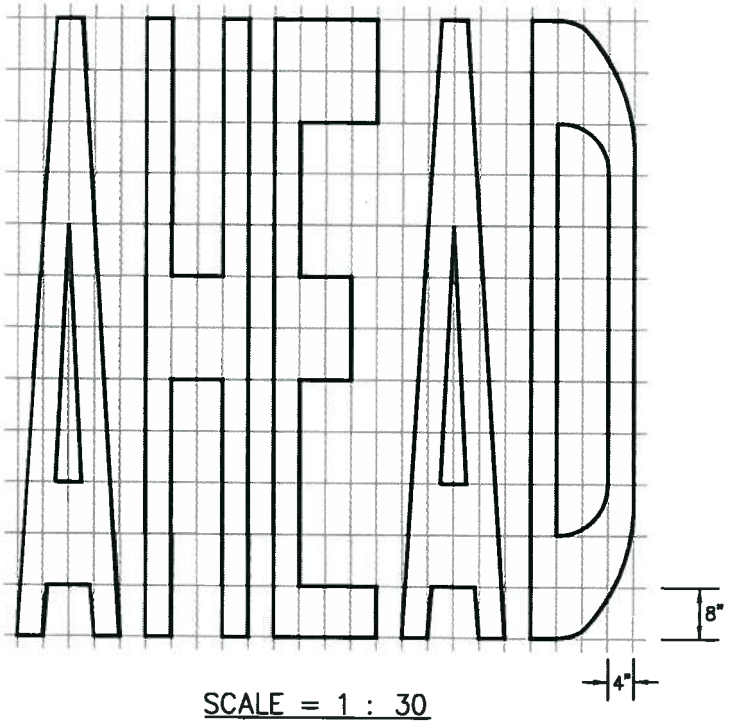

SCALE = 1 : 30

NOTES:

1. ALL LETTERS AND NUMERALS SHALL BE THERMOPLASTIC IN CONFORMANCE WITH THE STANDARD ALPHABETS FOR HIGHWAY SIGNS AND PAVEMENT MARKINGS APPROVED BY DEPARTMENT OF TRANSPORTATION.
2. THE DESIGN DETAILS FOR VARIOUS WORDS ARE ALSO SHOWN IN DEPARTMENT OF TRANSPORTATION STANDARD PLANS.
3. "BUMP AHEAD" LEGENDS SHALL BE PLACED IN BOTH DIRECTIONS OF TRAFFIC AT 100 FEET IN ADVANCE OF THE SPEED LUMP.

San Ramon CALIFORNIA INCORPORATED 1983	CITY OF SAN RAMON	DRAWN BY: ELR	STANDARD DETAIL	APPROVED BY: DATE: 6/1/11
		CHECKED BY: ENG'G.,PUBL.SV.		Brian R Bornstein CITY ENGINEER
	DETAIL R-7d	DATE: 05/20/11	SPEED LUMP	SHT 4 of 4