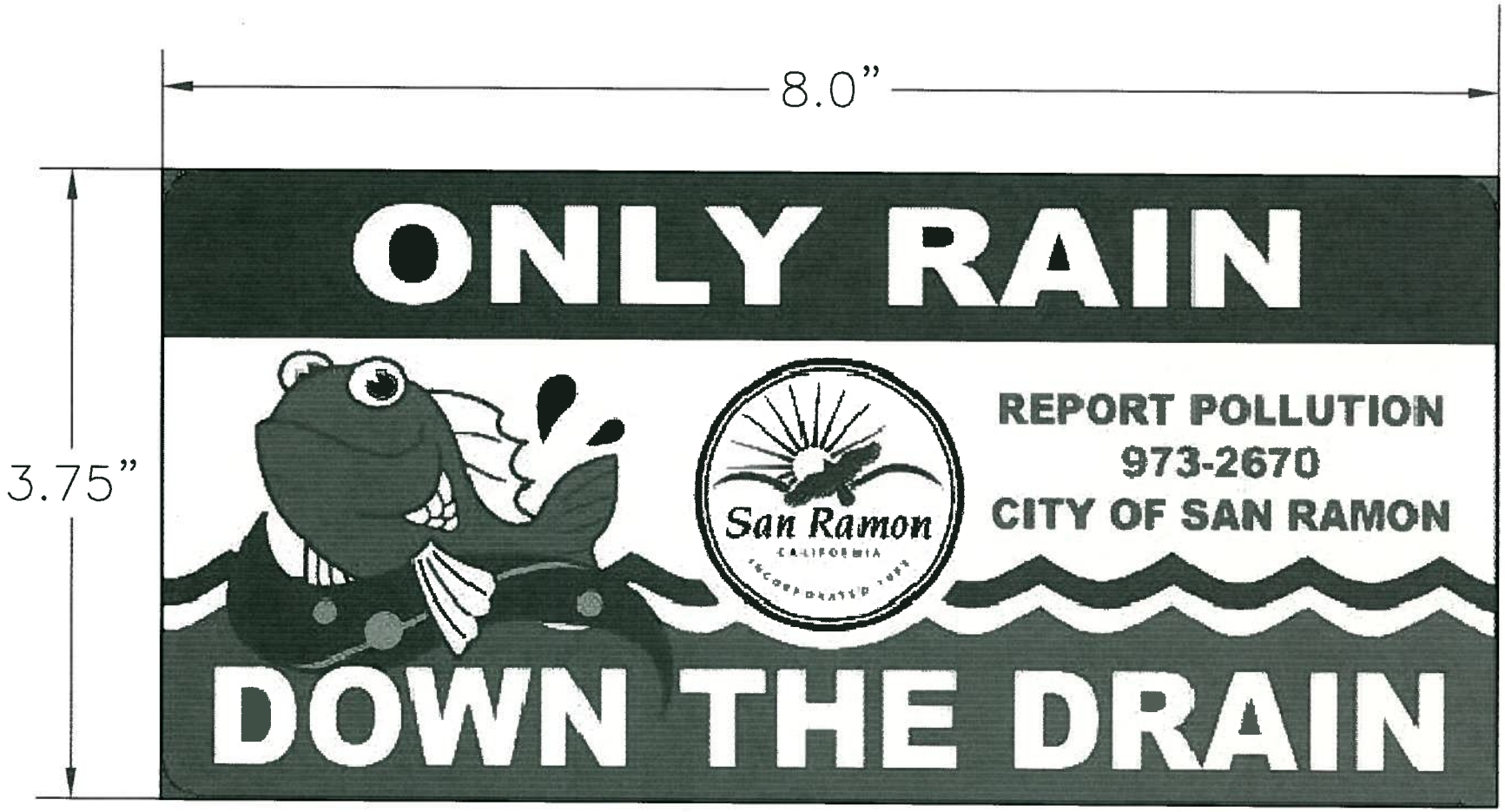

SCALE 1:1

NOTES:

1. MARKER MAY BE PURCHASED FROM CITY OF SAN RAMON, ENGINEERING SERVICES DEPARTMENT.
2. MARKER TO BE PLACED ON ALL STORM WATER INLETS.
3. SEE SD-1, SD-2 & SD-4 FOR SAMPLE LOCATIONS.
4. INSTALL PER INSTRUCTIONS PROVIDED USING DAS CURB MARKER ADHESIVE.

San Ramon CALIFORNIA	CITY OF SAN RAMON	DRAWN BY: ELR	STANDARD DETAIL	APPROVED BY: DATE: 6/1/11
		CHECKED BY: ENGINEERING		Brian N Bornstein CITY ENGINEER
	DETAIL M-1	DATE: 05/20/11	CLEAN WATER MARKER	SHT 1 of 1

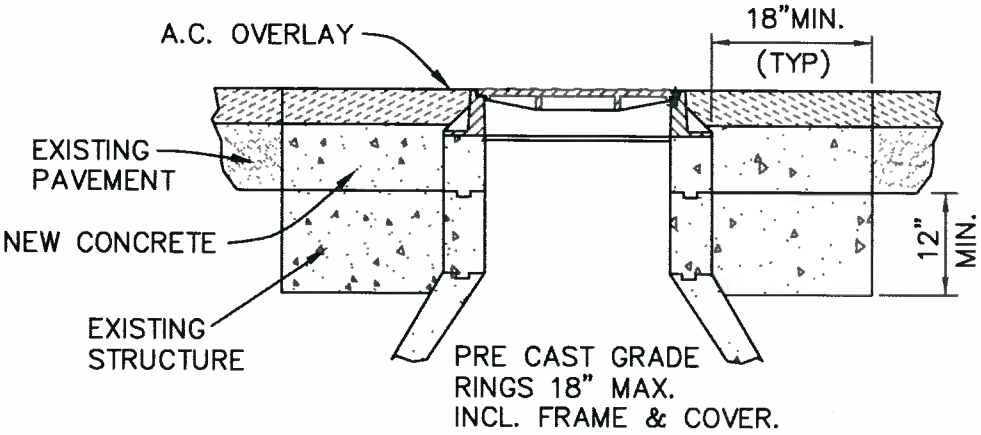

RAISED
N.T.S.

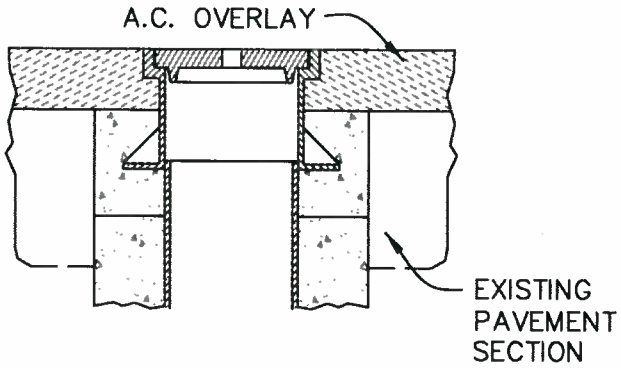

RAISED
N.T.S.

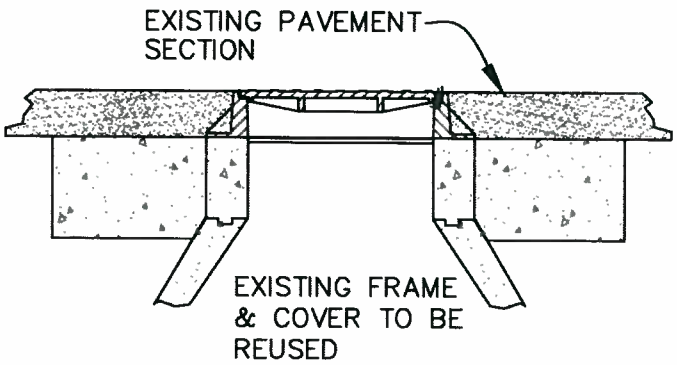

EXISTING
N.T.S.

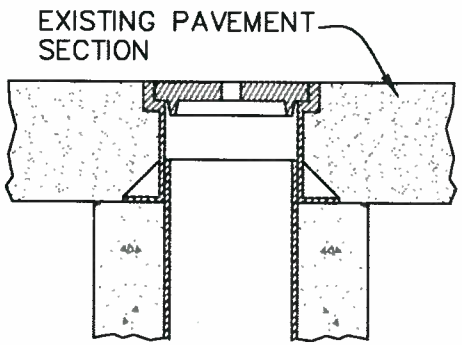

EXISTING
N.T.S.

FRAME COVER AND AC LIP TO BE WITHIN 1/8" OF THE ELEVATION OF SURROUNDING PAVEMENT. TO BE DETERMINED WITH STRAIGHT EDGE AS SHOWN

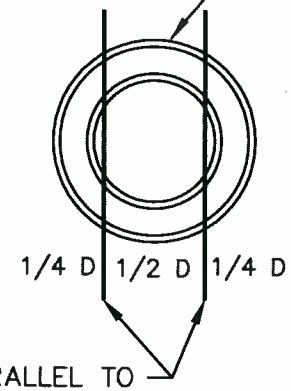

STRAIGHT EDGES PARALLEL TO DIRECTION OF TRAVEL OR AS DIRECTED BY THE CITY ENGINEER

San Ramon CALIFORNIA INCORPORATED 1983	CITY OF SAN RAMON	DRAWN BY: ELR	STANDARD DETAIL	APPROVED BY: DATE: 6/1/11
		CHECKED BY: ENGINEERING		Brian R. Bornstein CITY ENGINEER
	DETAIL M-2a	DATE: 05/20/11	MANHOLE / VALVE CASTING ADJUSTMENT	SHT 1 of 3

IN NEW A.C. STREET CONSTRUCTION

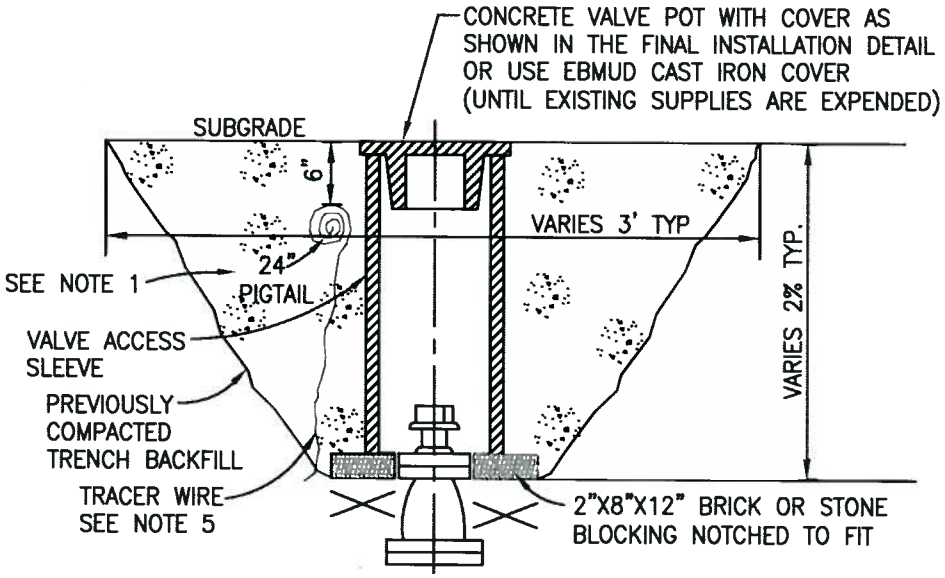

PRELIMINARY INSTALLATION PRIOR TO PLACING PAVING BASE

N.T.S.

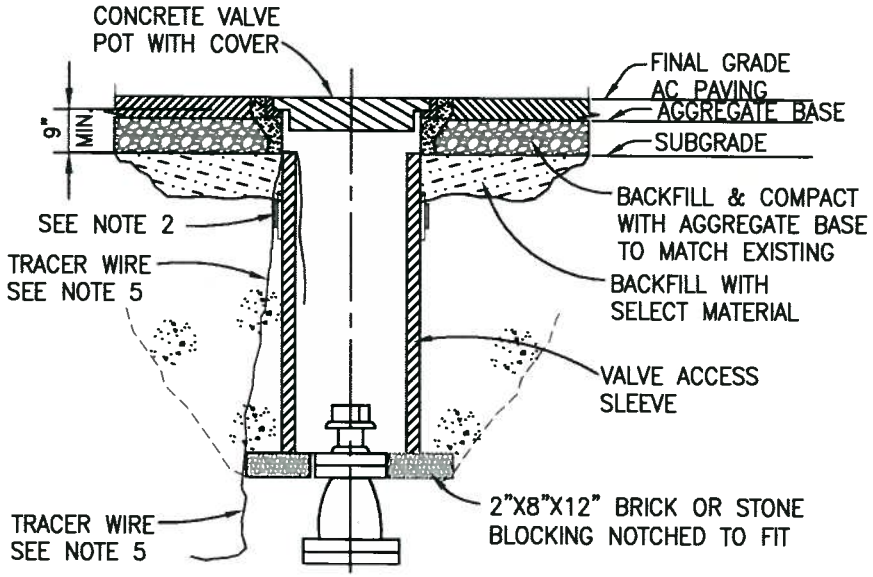

FINAL INSTALLATION AFTER PAVING IS COMPLETED

N.T.S.

NOTES:

1. AGGREGATE BASE OR OTHER SUITABLE MATERIAL FOR COMPACTION.
2. USE REPAIR CLAMP OR 3 WRAPS OF 2" WIDE PIPE TAPE, OR EQUIVALENT, TO HOLD JOINT IN ALIGNMENT WHILE PLACING CONCRETE.
3. VALVE ACCESS SLEEVE IS 8.625" O.D. STEEL PIPE, MIN. WALL 10 GA., MAX. SCHEDULE 40 OR SCHEDULE 40 PVC PIPE.
4. TOP OF VALVE COVER TO FIT FLUSH WITH FINISH GRADE OF THE STREET OR RIGHT OF WAY.
5. NON-METALLIC MAINS REQUIRE TRACER WIRE TO BE EXTENDED INTO THE TOP OF THE VALVE POT, IN ACCORDANCE WITH E.B.M.U.D. SPECIFICATIONS.
6. ON STREET RESURFACING PROJECTS, INSTALL RISER RING(S), AS REQUIRED TO ALLOW GATE POT COVER TO CONFORM WITH ADJACENT SURFACES.

San Ramon CALIFORNIA INCORPORATED 1983	CITY OF SAN RAMON	DRAWN BY: ELR	STANDARD DETAIL	APPROVED BY: DATE: 6/1/11
		CHECKED BY: ENGINEERING		Brian K. Bornstein CITY ENGINEER
	DETAIL M-2b	DATE: 05/20/11	VALVE POT INSTALLATION	SHT 2 of 3

IN EXISTING CONCRETE PAVEMENT

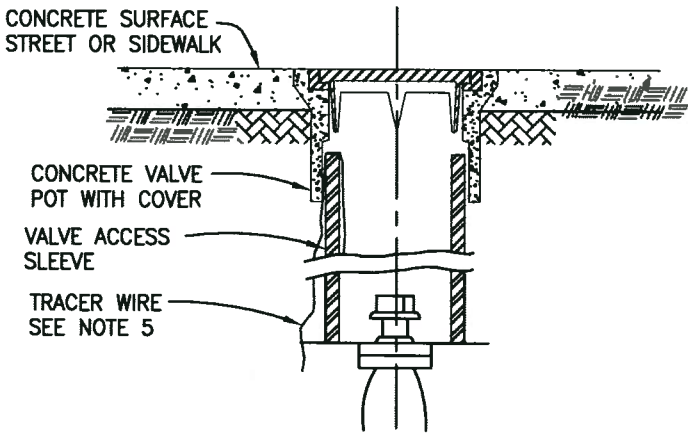

IN EXISTING ASPHALT PAVEMENT OR DIRT

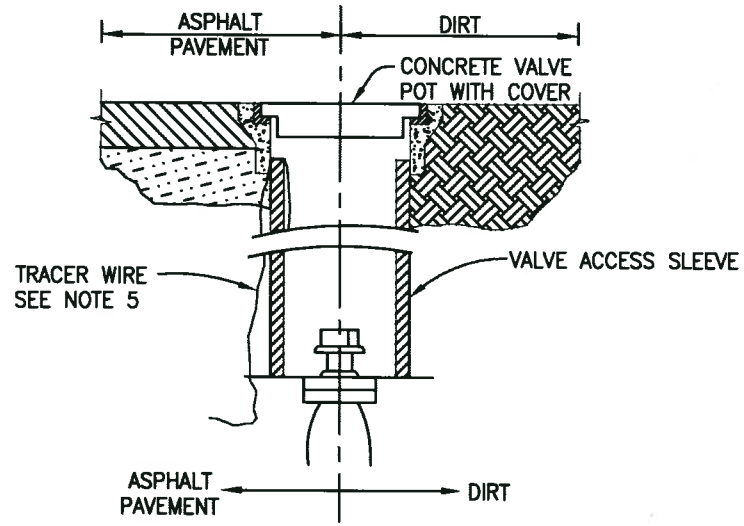

IN SLOPING GRADES

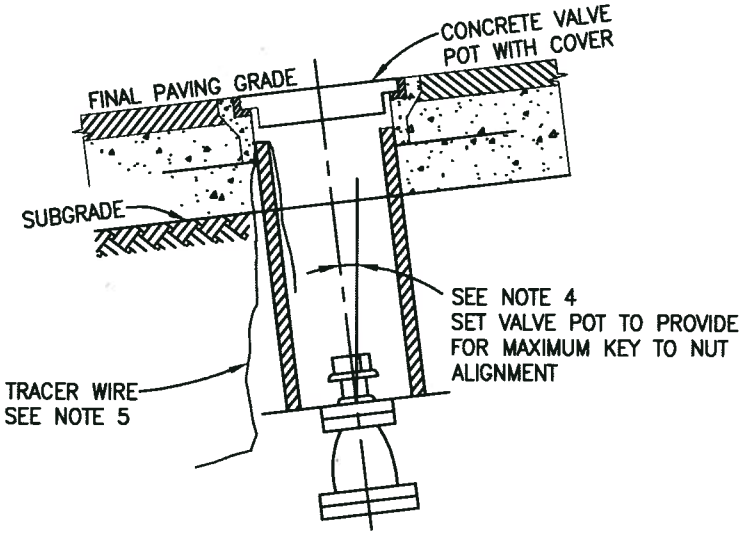

NOTES:

1. AGGREGATE BASE OR OTHER SUITABLE MATERIAL FOR COMPACTION.
2. USE REPAIR CLAMP OR 3 WRAPS OF 2" WIDE PIPE TAPE, OR EQUIVALENT, TO HOLD JOINT IN ALIGNMENT WHILE PLACING CONCRETE.
3. VALVE ACCESS SLEEVE IS 8.625" O.D. STEEL PIPE, MIN. WALL 10 GA., MAX. SCHEDULE 40 OR SCHEDULE 40 PVC PIPE.
4. TOP OF VALVE COVER TO FIT FLUSH WITH FINISH GRADE OF THE STREET OR RIGHT OF WAY.
5. NON-METALLIC MAINS REQUIRE TRACER WIRE TO BE EXTENDED INTO THE TOP OF THE VALVE POT, IN ACCORDANCE WITH E.B.M.U.D. SPECIFICATIONS.
6. ON STREET RESURFACING PROJECTS, INSTALL RISER RING(S), AS REQUIRED TO ALLOW GATE POT COVER TO CONFORM WITH ADJACENT SURFACES.

San Ramon CALIFORNIA INCORPORATED 1983	CITY OF SAN RAMON	DRAWN BY: ELR	STANDARD DETAIL	APPROVED BY: DATE: 6/1/11
		CHECKED BY: ENGINEERING		Brian R Bornstein CITY ENGINEER
	DETAIL M-2c	DATE: 05/20/11	VALVE POT INSTALLATION	SHT 3 of 3

RESIDENTIAL STREETS AND PAVED TRAILS
WHERE THE CUT IS 4' OR LESS IN WIDTH

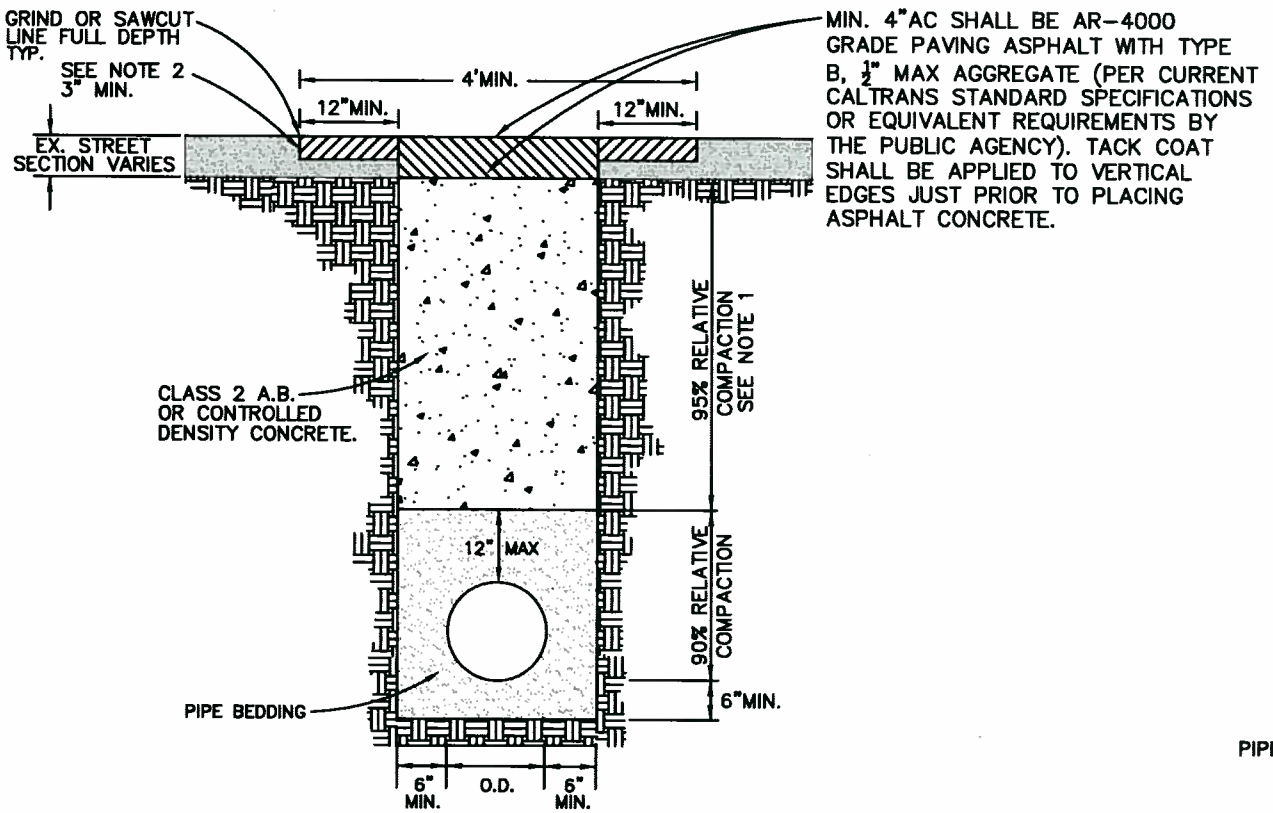

N.T.S.

ALL OTHERS

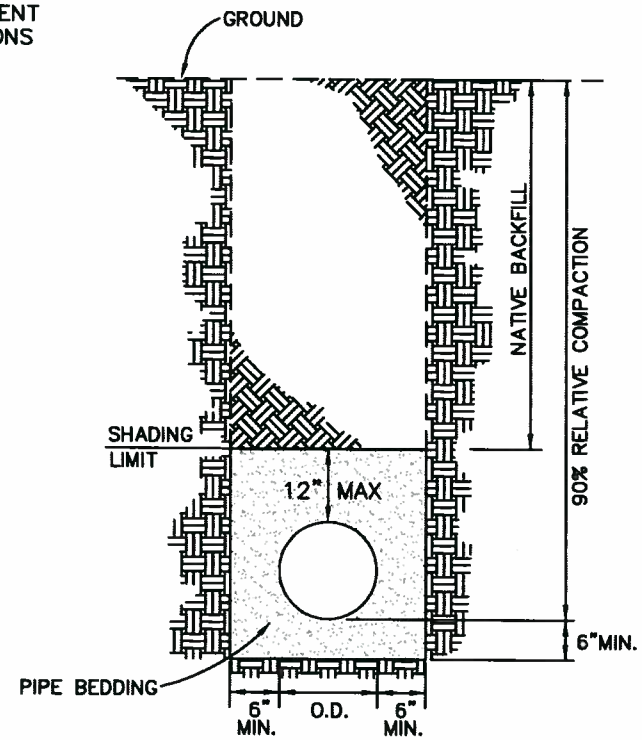

N.T.S.

NOTES:

1. RELATIVE COMPACTION PER, ASTM – 1557.
2. THE DEPTH OF SURFACING SHOWN IS THE REQUIRED MINIMUM. IF THE EXISTING STRUCTURAL SECTION IS THICKER, IT SHALL BE MATCHED.
3. TRENCHES RUNNING IN EXISTING PAVEMENT SHALL BE RESURFACED USING AN APPROVED SPREADER BOX. THE EDGES OF ALL TRENCHES SHALL BE NEATLY RAKED.
4. MATERIAL FOR "NATIVE BACKFILL" SHALL BE OBTAINED FROM EXCAVATION AND SHALL BE FREE FROM STONES, LUMPS, BROKEN CONCRETE OR BITUMINOUS SURFACING EXCEEDING 4" IN GREATEST DIMENSION, VEGETABLE MATTER, OR OTHER UNSATISFACTORY MATERIAL. THE MATERIAL SHALL CONTAIN SUFFICIENT FINES TO INSURE THAT VOIDS WILL BE FILLED AND THAT SPECIFIED COMPACTION REQUIREMENT WILL BE MET. WHEN MATERIAL FROM THE EXCAVATION IS DEEMED UNSUITABLE FOR USE AS BACKFILL BY ENGINEER. IT SHALL BE DISPOSED OF AND SUITABLE MATERIAL FURNISHED.
5. BACKFILL MATERIAL FOR TRENCHES SHALL BE PLACED AND MECHANICALLY COMPACTED IN 6'–8' LIFTS. JETTING, AND / OR FLOODING WILL NOT BE PERMITTED.
6. IF COVER IS LESS THAN 2 FEET SPECIAL DESIGN IS REQUIRED.
7. WHERE THE EDGE OF THE PAVEMENT CUT IS WITHIN 4 FEET OF A GUTTER LIP OR THE EDGE OF PAVEMENT, AC PAVEMENT BETWEEN THE TRENCH CUT AND THE GUTTER LIP/ EDGE OF PAVEMENT SHALL BE REMOVED AND REPLACED.
8. ALL TRENCH REPAIR SHALL BE TESTED AND CERTIFIED BY AN INDEPENDENT TESTING AGENCY APPROVED BY THE CITY AND ALL RESULTS SHALL BE REPORTED IN WRITING TO THE CITY, PRIOR TO PAVING.
9. ADDITIONAL REQUIREMENTS MAY BE ADDED BY THE CITY IF MORE THAN ONE LANE (BICYCLE OR VEHICLE) IS AFFECTED OR UNUSUAL CONDITIONS EXIST.

San Ramon CALIFORNIA INCORPORATED 1980	CITY OF SAN RAMON	DRAWN BY: ELR	STANDARD DETAIL	APPROVED BY: DATE: 6/1/11
		CHECKED BY: ENGINEERING		Brian N Bernstein CITY ENGINEER
	DETAIL M–3a	DATE 05/20/11	LONGITUDINAL TRENCH BACKFILL & RESURFACING	SHT 1 of 3

COLLECTOR AND ARTERIAL STREETS AND PAVEMENT CUTS GREATER THAN 4' WIDTH

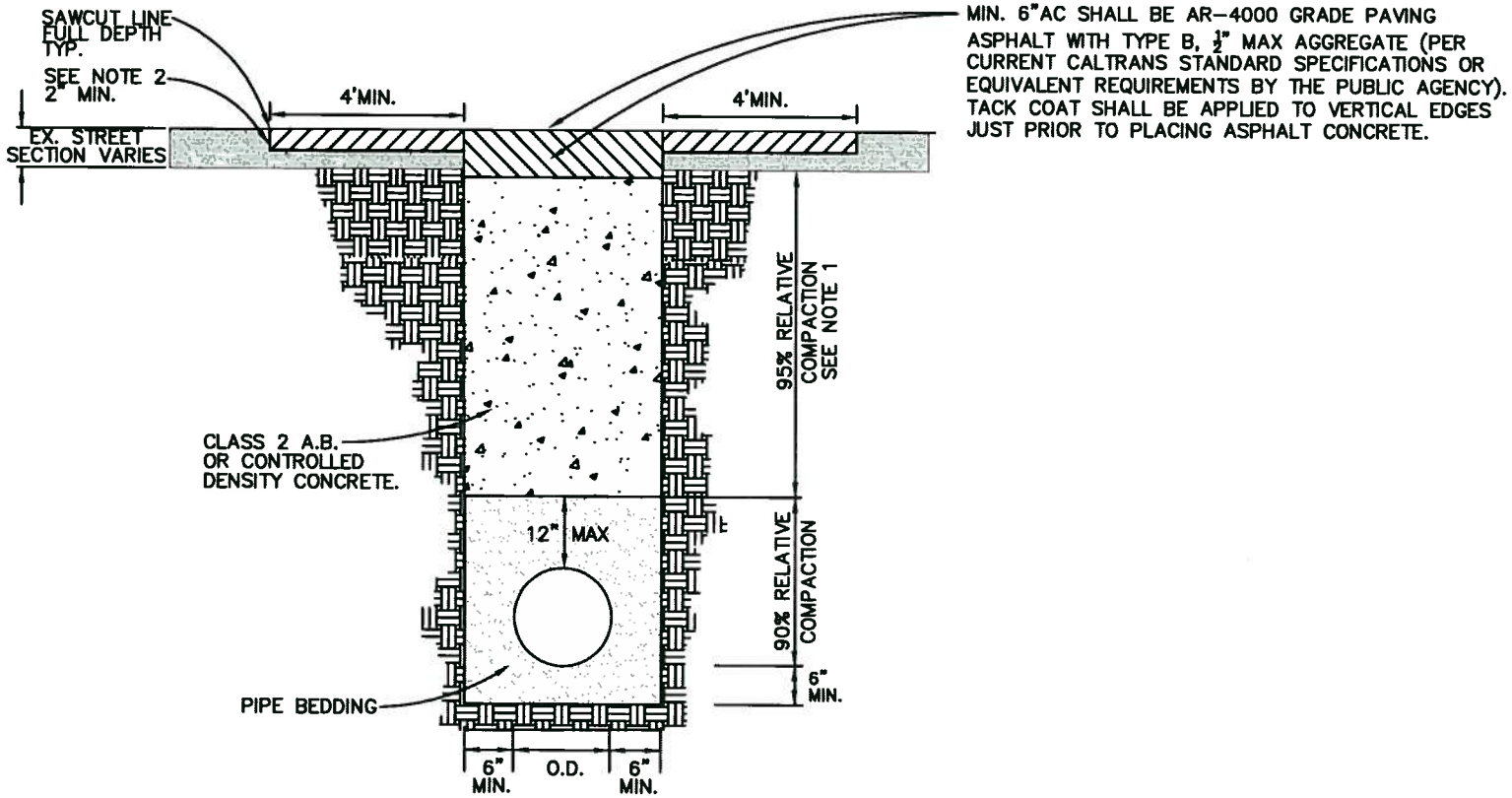

N.T.S

NOTES:

1. RELATIVE COMPACTION PER, ASTM – 1557.
2. THE DEPTH OF SURFACING SHOWN IS THE REQUIRED MINIMUM. IF THE EXISTING STRUCTURAL SECTION IS THICKER, IT SHALL BE MATCHED.
3. TRENCHES RUNNING IN EXISTING PAVEMENT SHALL BE RESURFACED USING AN APPROVED SPREADER BOX. THE EDGES OF ALL TRENCHES SHALL BE NEATLY RAKED.
4. MATERIAL FOR "NATIVE BACKFILL" SHALL BE OBTAINED FROM EXCAVATION AND SHALL BE FREE FROM STONES, LUMPS, BROKEN CONCRETE OR BITUMINOUS SURFACING EXCEEDING 4" IN GREATEST DIMENSION, VEGETABLE MATTER, OR OTHER UNSATISFACTORY MATERIAL. THE MATERIAL SHALL CONTAIN SUFFICIENT FINES TO INSURE THAT VOIDS WILL BE FILLED AND THAT SPECIFIED COMPACTION REQUIREMENT WILL BE MET. WHEN MATERIAL FROM THE EXCAVATION IS DEEMED UNSUITABLE FOR USE AS BACKFILL BY ENGINEER. IT SHALL BE DISPOSED OF AND SUITABLE MATERIAL FURNISHED.
5. BACKFILL MATERIAL FOR TRENCHES SHALL BE PLACED AND MECHANICALLY COMPACTED IN 6"–8" LIFTS. JETTING, AND / OR FLOODING WILL NOT BE PERMITTED.
6. IF COVER IS LESS THAN 2 FEET SPECIAL DESIGN IS REQUIRED.
7. WHERE THE EDGE OF THE PAVEMENT CUT IS WITHIN 4 FEET OF A GUTTER LIP OR THE EDGE OF PAVEMENT, AC PAVEMENT BETWEEN THE TRENCH CUT AND THE GUTTER LIP/ EDGE OF PAVEMENT SHALL BE REMOVED AND REPLACED.
8. ALL TRENCH REPAIR SHALL BE TESTED AND CERTIFIED BY AN INDEPENDENT TESTING AGENCY APPROVED BY THE CITY AND ALL RESULTS SHALL BE REPORTED IN WRITING TO THE CITY, PRIOR TO PAVING.
9. ADDITIONAL REQUIREMENTS MAY BE ADDED BY THE CITY IF MORE THAN ONE LANE (BICYCLE OR VEHICLE) IS AFFECTED OR UNUSUAL CONDITIONS EXIST.
10. IF TOP OF PIPE IS LESS THAN 30" FROM GRADE, MUST USE DEEP LIFT AC AS DIRECTED BY CITY ENGINEER

San Ramon CALIFORNIA INCORPORATED 1983	CITY OF SAN RAMON	DRAWN BY: ELR	STANDARD DETAIL	APPROVED BY: DATE: 6/1/11
		CHECKED BY: ENGINEERING		Brian A. Boenstein CITY ENGINEER
	DETAIL M–3b	DATE: 05/20/11	LONGITUDINAL TRENCH BACKFILL & RESURFACING	SHT 2 of 3

CONTROLLED DENSITY FILL:

a) THE CONTROLLED DENSITY FILL (CDF) MIX DESIGN SHALL BE FROM AN APPROVED SOURCE.

b) CDF SHALL BE A MIXTURE OF PORTLAND CEMENT, FLY ASH, AGGREGATES, WATER AND ADMIXTURES PROPORTIONED TO PROVIDE A NON-SEGREGATING, SELF- CONSOLIDATING, FREE-FLOWING MATERIAL WHICH WILL RESULT IN A HARDENED, DENSE, NON-SETTLING FILL PRODUCING UNCONFINED COMPRESSIVE 28 DAY STRENGTHS FROM 50 PSI TO A MAXIMUM OF 150 PSI.

c) THE CONTRACTOR SHALL SUBMIT THE MIX DESIGN ONE WEEK MINIMUM PRIOR TO INTENDED USE FOR REVIEW AND APPROVAL. ALTERNATIVELY THE CONTRACTOR MAY PROVIDE THE SUPPLIER AND MIX NUMBER IF THE CDF MIX HAS BEEN APPROVED WITHIN THE PREVIOUS 12 MONTHS.

d) THE CONTRACTOR WILL PROVIDE BATCH WEIGHTS SHOWING THE AMOUNTS OF ALL INGREDIENTS IN THE MIX, BATCH TIME, AND THE TOTAL AMOUNT OF THE BATCH.

e) CDF SHALL BE PERFORMANCE BASED AND MEET THE FOLLOWING CRITERIA:

- THE CDF MIXTURE SHALL BE FLOWABLE NON-SEGREGATING AND SELF LEVELING.
- CAN BE PAVED ON WITHIN 48 HOURS UNLESS OTHERWISE APPROVED
- TYPE F FLY ASH: 200 LBS MINIMUM
- TYPE I OR II CEMENT: 50 LBS MINIMUM
- SETTLING SHALL BE LESS THAN 1/8" PER FOOT DEPTH
- FINE AGGREGATE (LESS THAN 3/8") SHALL BE USED UNLESS OTHERWISE APPROVED
- CONCRETE UNIT WEIGHT SHALL BE 100 PCF MINIMUM

g) TRENCH SECTIONS TO BE FILLED WITH CDF SHALL BE CONTAINED AT EITHER END OF THE TRENCH SECTION BY BULKHEADS OR EARTH FILL.

h) DURING CDF CURE TIME CONTRACTOR SHALL INSTALL STEEL STREET PLATES OR OTHER PROTECTIVE DEVICES WHICH WILL ALLOW FOR THE PASSAGE AND SAFETY OF TRAFFIC WITH NO LOAD TRANSFERRED TO THE CDF.

i) CONTRACTOR SHALL ALLOW FOR A MINIMUM 48 HOUR CURE TIME FOR CDF PRIOR TO PLACING ASPHALT.

San Ramon CALIFORNIA INCORPORATED 1983	CITY OF SAN RAMON	DRAWN BY: ELR	STANDARD DETAIL	APPROVED BY: DATE: 6/6/11
		CHECKED BY: ENGINEERING		Brian R Bornstein CITY ENGINEER
	DETAIL M-3c	DATE: 05/20/11	LONGITUDINAL TRENCH REPAIR & RESURFACING	SHT 3 of 3