PROCEDURES:

1. DESIGN RESPONSIBILITIES
   A. ALL ELECTROLIER PLANS SHALL BE DESIGNED BY A LICENSED ELECTRICAL OR CIVIL ENGINEER AND THEY SHALL BE DRAWN ON A SEPERATE ELECTROLIER PLAN.
   B. PLANS SHALL INDICATE ALL EXISTING ADJACENT ELECTROLIERS.
   C. PLANS SHALL BE APPROVED BY THE CITY ENGINEER AND THE DIRECTOR OF ENGINEERING.
2. SERVICE POINTS
   A. WORK SHALL BE COORDINATED WITH PG&E TO ESTABLISH SERVICE POINTS FOR ELECTROLIERS.
   B. ALL SERVICE POINTS SHALL BE APPROVED BY PG&E.
3. DESIGN CRITERIA
   A. STREET LIGHT DETAILS SHALL BE PER STANDARD DETAILS.
   B. ILLUMINANCE LEVELS SHALL BE DESIGNED BASED UPON THE FOLLOWING:

ROADWAY CLASSIFICATION	AVERAGE MAINTAINED HORIZONTAL ILLUMINATION	UNIFORMITY
RESIDENTIAL/LOCAL	.3 FC	6:1
COLLECTOR	.6 FC	4:1
ARTERIAL	.9 FC	3:1

   C. LED LIGHTING SHALL BE USED ON ALL ROADWAYS AND DESIGNED FOR SITE SPECIFIC APPLICATIONS. PROPOSED LIGHTING AND MANUFACTURER SPECIFICATIONS SHALL BE SUBMITTED AND APPROVED BY THE CITY ENGINEER.
   D. LED LIGHTING FIXTURE SHALL CONFORM TO THE REQUIREMENTS OF SECTION 86 OF THE CALTRANS STANDARD SPECIAL PROVISIONS AND RELATED SECTIONS. FIXTURES SHALL BE UL-APPROVED AND SHALL BE LISTED ON THE PG&E QUALIFIED PRODUCTS LIST WITH TARRIFF RATES ESTABLISHED BY PG&E. FIXTURES SHALL HAVE GUARANTEED AVERAGE LAMP LIFE OF 50,000 HOURS AND SHALL BE FURNISHED WITH A MANUFACTURER WARRANTY PROVIDING REPLACEMENT OF FIXTURES THAT DO NOT MEET THIS PERFORMANCE REQUIREMENT. FIXTURES SHALL PRODUCE LIGHT AT 6,000K FREQUENCY, UNLESS OTHERWISE NOTED ON THE PLANS.

NOTES:

1. ALL WORK AND MATERIALS SHALL BE IN FULL ACCORDANCE WITH THE LATEST RULES AND REGULATIONS OF THE CITY OF SAN RAMON, APPLICABLE COUNTY AND STATE REGULATIONS, AND THE LATEST APPROVED STANDARDS OF IEEE, ASA, NEMA, UL, OSHA, AND PG&E WHERE APPLICABLE. NOTHING IN THESE PLANS AND SPECIFICATIONS IS TO BE CONSTRUED TO PERMIT WORK NOT CONFORMING TO THE ABOVE.
2. NO SPLICES SHALL BE PERMITTED BETWEEN JUNCTION BOXES, AND THOSE WITHIN BOXES SHALL BE WATER TIGHT.
3. JUNCTION BOXES MUST BE INSTALLED ADJACENT TO, BUT NOT MORE THAN FIVE FEET AWAY FROM EVERY ELECTROLIER.
4. JUNCTION BOXES SHALL BE #3 1/2 PULL BOX WITH MCCAIN VANDAL RESISTANT PULL BOX INSERT, OR APPROVED EQUIVALENT. COVERS SHALL BE INSCRIBED "STREET LIGHTING".
5. JUNCTION BOXES SHALL BE # 5 (OR EQUAL) FROM A PG&E SERVICE POINT.
6. JUNCTION BOXES SHALL NOT BE MORE THAN 250 FEET APART ON LONG RUNS. THIS SPACING FOLLOWS THE SPACING OF THE ELECTROLIER. SEE NOTE 3
7. MINIMUM CONDUIT SIZE TO BE 1 1/2" SCHEDULE 40 PVC. ALL CONDUIT ENDS TO BE DUCT SEALED.
8. MINIMUM RADIUS OF CONDUIT BENDS TO BE AS SHOWN ON SL-4.
9. CONDUCTORS TO BE UL LISTED 600V No. 8 AWG OR LARGER WITH 7 STRAND SOFT COPPER TYPE THW OR THWN WITH 3/64" INSULATION.
10. CONDUCTORS IN STREETLIGHT POLE AND ARM TO BE UL LISTED 600V No. 10 AWG THWN OR LARGER.
11. CIRCUITS WITH TWO (2) OR MORE ELECTROLIERS SHALL BE WIRED TO BALANCE THE LOAD.

San Ramon CALIFORNIA INCORPORATED 1983	CITY OF SAN RAMON	DRAWN BY: ELR	STANDARD DETAIL	APPROVED BY: DATE: 11-14-12
		CHECKED BY: ENGINEERING		Brian R Bornstein CITY ENGINEER
	DETAIL SL-1	DATE: 10/11/12	STREET LIGHTING DESIGN PROCEDURES AND NOTES	SHT 1 of 1

POLES

GALVANIZED STEEL POLES:

MOUNTING HEIGHT	SINGLE 6' ARM	DOUBLE 6' ARMS
30'	AMERON PL-286-2 VALMONT DS32-7.5A286-6S-GV UNION METAL FB-11286-E6 (MOD. 2C)	AMERON PL-286D-2 VALMONT DS32-7.5A286-6D-GV UNION METAL FB-11286-EE6 (MOD. 2C)
	SINGLE 8' ARM	**DOUBLE 8' ARMS**
32' - 6"	AMERON PL-318-2 VALMONT DS32-8.0A310-8S-GV UNION METAL FB-11310-E8 (MOD. 2C)	AMERON PL-318D-2 VALMONT DS32-8.0A310-8D-GV UNION METAL FB-11310-EE8 (MOD. 2C)
	SINGLE 12' ARM	**DOUBLE 12' ARMS**
33' - 9" +/-	AMERON N3012 VALMONT 320845808T4 UNION METAL	AMERON N3012D VALMONT 320860108T4 UNION METAL
	SINGLE 15' ARM	**DOUBLE 15' ARMS**
34' - 3" +/-	AMERON N3015 VALMONT 320845808T4 UNION METAL	AMERON N3015D VALMONT 320860106T4 UNION METAL

LUMINAIRES

LAMP SIZE	MANUFACTURER & PRODUCT	SERIES	CATALOG NUMBER
70 WATT	AMERICAN ELECTRIC LIGHTING POWER-PAD ROADWAY CUTOFF	313	313-562E2-DJ 313-562E3-DJ
150 WATT	AMERICAN ELECTRIC LIGHTING POWER PAD ROADWAY CUTOFF	313	313-56262-DJ 313-56263-DJ
200 WATT	AMERICAN ELECTRIC LIGHTING POWER PAD ROADWAY CUTOFF	313	313-062J2-DJ
250 WATT	AMERICAN ELECTRIC LIGHTING POWER PAD ROADWAY CUTOFF	313	313-06232-DJ
200 WATT	AMERICAN ELECTRIC LIGHTING POWER PAD ROADWAY CUTOFF	325	325-062J2-DJ 325-062J3-DJ
250 WATT	AMERICAN ELECTRIC LIGHTING POWER PAD ROADWAY CUTOFF	325	325-06232-DJ 325-06233-DJ

NOTES:

ALL NEW ROADWAY LIGHTING SHALL BE LED LIGHTING AND SHALL BE MANUFACTURED BY ONE THE FOLLOWING COMPANIES AND APPROVED BY THE CITY OF SAN RAMON:

1. BETA LED BY RUUD LIGHTING INC.
2. PHILIPS LUMEC
3. LEOTEK ELECTRONICS USA CORP.

NOTES:

1) TYPICAL FOR NEW INSTALLATION.
2) FOR REPLACEMENT INSTALLATION, REPLACE IN KIND.

San Ramon CALIFORNIA INCORPORATED 1982	CITY OF SAN RAMON	DRAWN BY: ELR	STANDARD DETAIL	APPROVED BY: DATE: 11-14-12
		CHECKED BY: ENG'G., PS		Brian R Bornstein CITY ENGINEER
	DETAIL SL-2	DATE: 10/11/12	POLE AND LUMINAIRE SCHEDULE	SHT 1 of 1

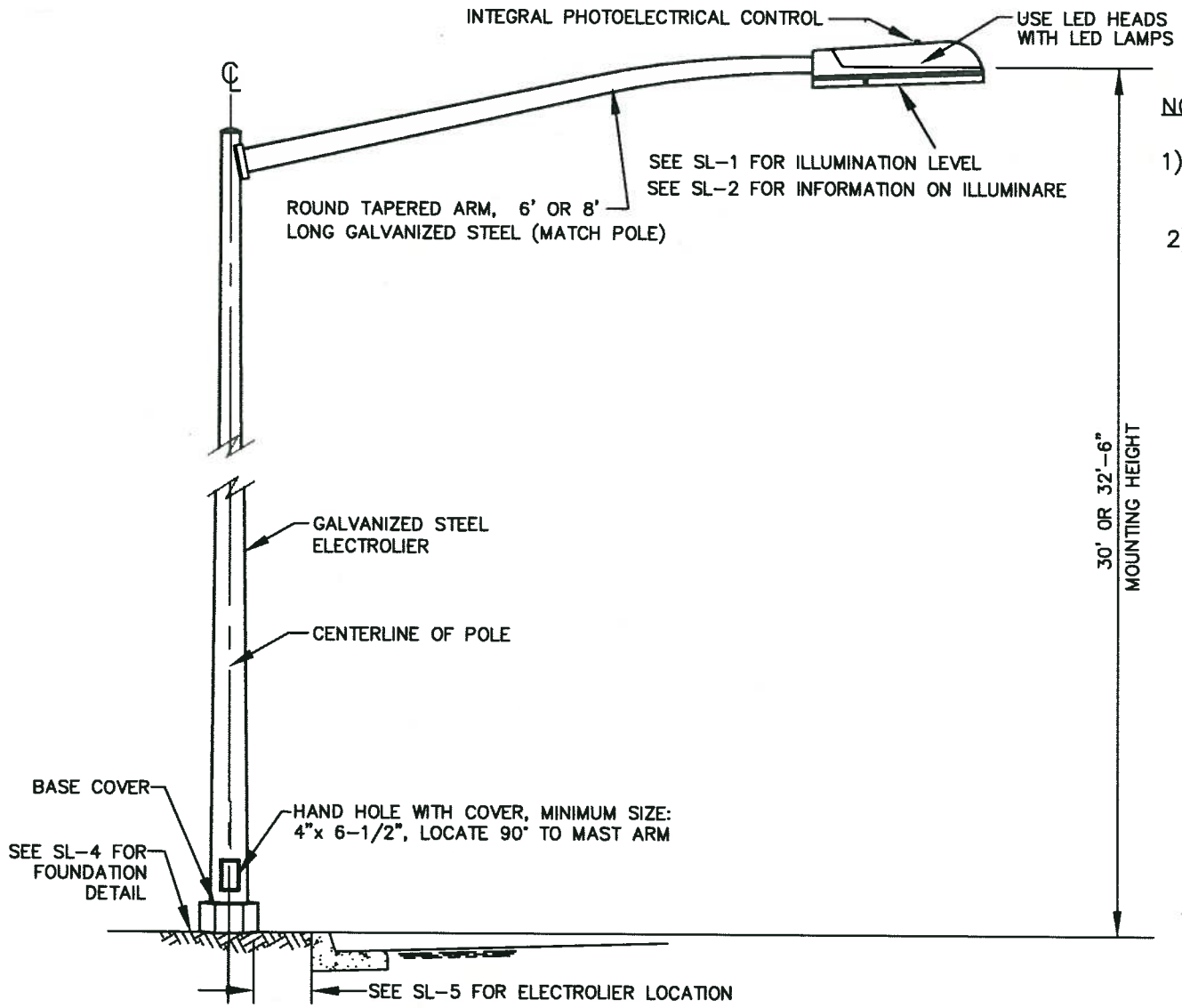

NOTES:

1) TYPICAL FOR NEW INSTALLATION.

2) FOR REPLACEMENT, INSTALLATION, REPLACE IN KIND.

NOT TO SCALE

San Ramon CALIFORNIA INCORPORATED 1980	CITY OF SAN RAMON	DRAWN BY: ELR	STANDARD DETAIL	APPROVED BY: DATE: 6/1/11 Brian N Bornstein CITY ENGINEER
		CHECKED BY: ENGINEERING		
	DETAIL SL-3	DATE: 05/20/11	ELECTROLIER	SHT 1 of 1

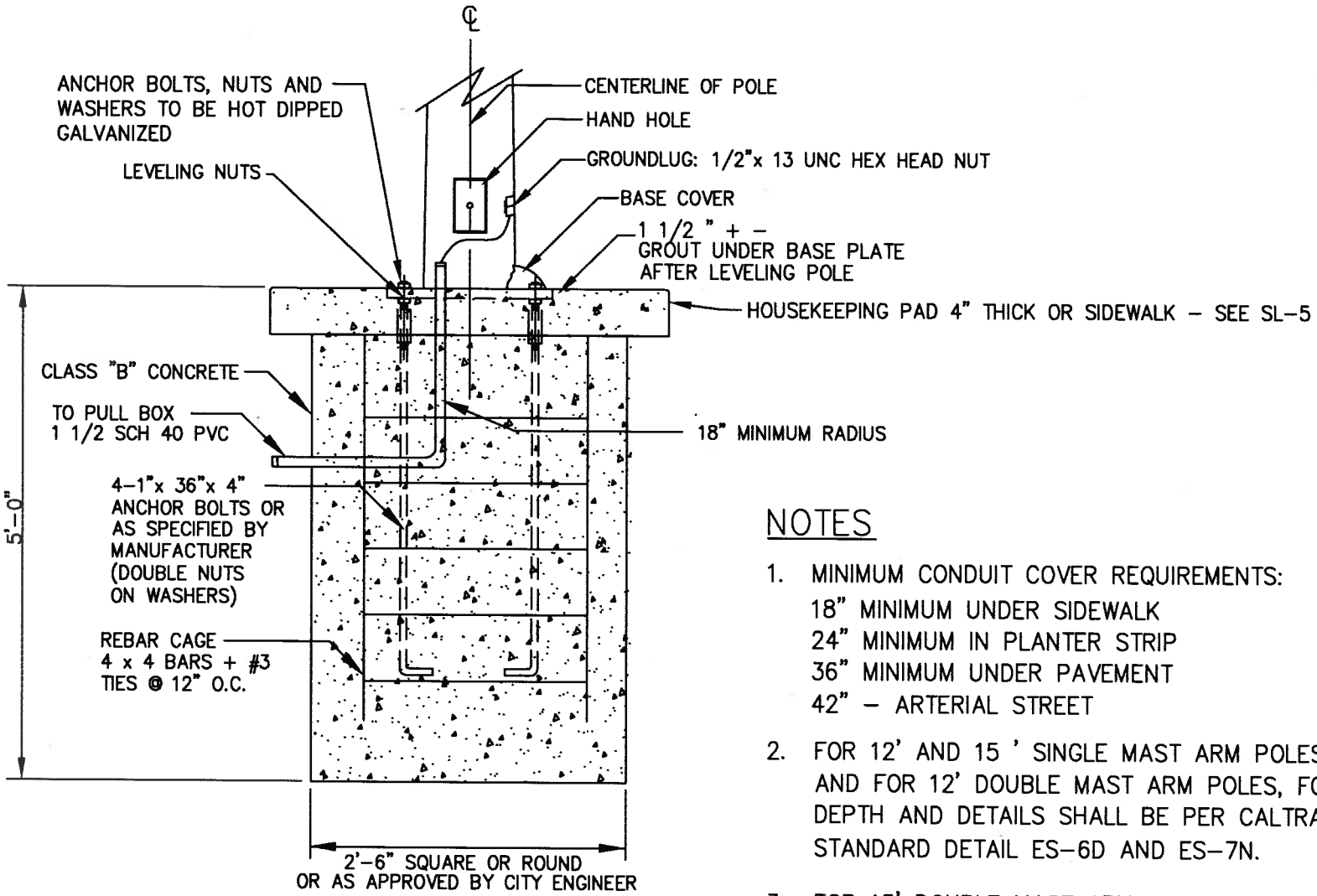

SECTION A–A

N.T.S.

NOTES

1. MINIMUM CONDUIT COVER REQUIREMENTS:
   18" MINIMUM UNDER SIDEWALK
   24" MINIMUM IN PLANTER STRIP
   36" MINIMUM UNDER PAVEMENT
   42" – ARTERIAL STREET
2. FOR 12' AND 15 ' SINGLE MAST ARM POLES, AND FOR 12' DOUBLE MAST ARM POLES, FOUNDATION DEPTH AND DETAILS SHALL BE PER CALTRANS STANDARD DETAIL ES-6D AND ES-7N.
3. FOR 15' DOUBLE MAST ARM POLES, FOUNDATION DEPTH AND DETAILS SHALL BE PER THE MANUFACTURERS SPECIFICATION OR PER THE CITY ENGINEER, OR PER CALTRANS.

San Ramon CALIFORNIA INCORPORATED 1982	CITY OF SAN RAMON	DRAWN BY: ELR	STANDARD DETAIL	APPROVED BY: DATE: 6/1/11
		CHECKED BY: ENGINEERING		Brian N Bornstein CITY ENGINEER
	DETAIL SL-4	DATE: 05/20/11	ELECTROLIER FOUNDATION	SHT 1 of 1

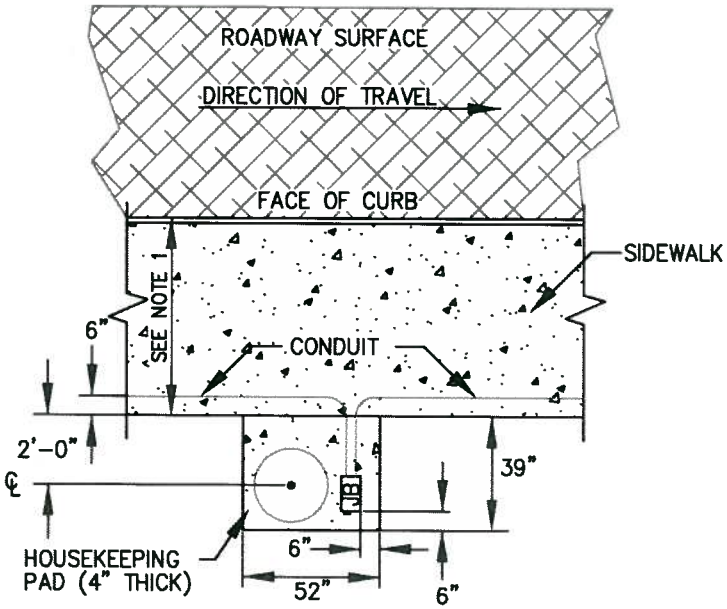

16" MIN. RADIUS BENDS FOR 1 1/2" CONDUIT
18" MIN. RADIUS BENDS FOR 2" CONDUIT
SET JUNCTION BOX PERPENDICULAR TO STREET
POLE HAND HOLE TO FACE JUNCTION BOX

MONOLITHIC SIDEWALK

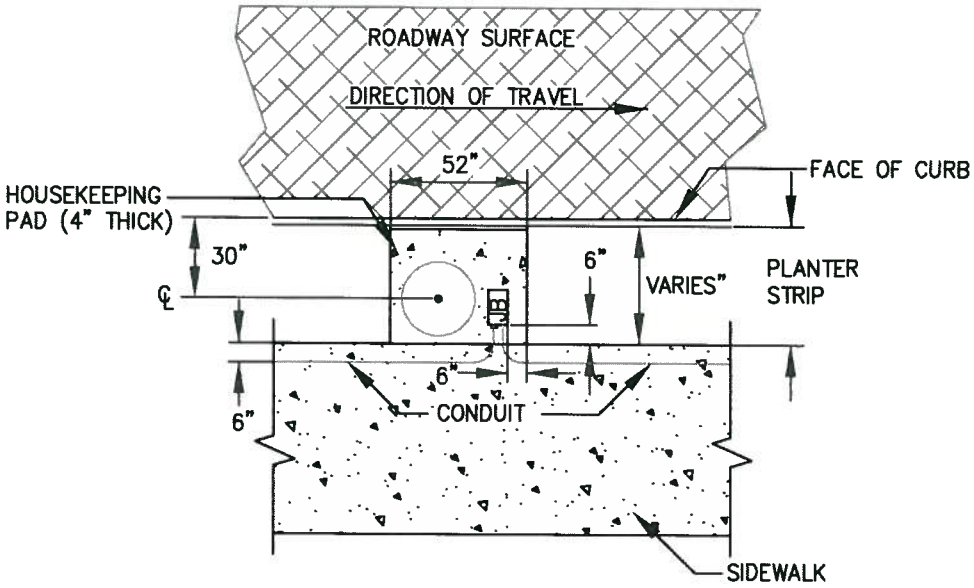

18" MIN. RADIUS BENDS IN CONDUIT
SET JUNCTION BOX PERPENDICULAR TO STREET
POLE HAND HOLE TO FACE JUNCTION BOX

PLANTER STRIP OR
CURVILINEAR SIDEWALK

PLAN VIEW

N.T.S.

NOTES:

1. FOR ELECTROLIERS IN SIDEWALKS, INSTALL CENTER LINE OF ELECTROLIER A MINIMUM OF 30" FROM FACE OF CURB AND PROVIDE MINIMUM OF FOUR FEET OF SIDEWALK CLEARANCE.
2. HOUSEKEEPING PAD SHALL EXTEND 6" MINIMUM BEYOND STREET LIGHT FOUNDATION AND JUNCTION BOX.
3. PAD OR SIDEWALK TO BE EXTENDED TO FILL ANY GAP LESS THAN 12".
4. HOUSEKEEPING PAD TO BE SLOPED AT 2% TOWARDS STREET AND ELEVATION SHALL CONFORM TO ADJOINING CONCRETE.
5. IN MEDIAN ISLANDS, CENTERLINE OF ELECTROLIER TO BE ON CENTERLINE OF MEDIAN.

San Ramon CALIFORNIA INCORPORATED 1980	CITY OF SAN RAMON	DRAWN BY: ELR	STANDARD DETAIL	APPROVED BY: DATE: 6/1/11
		CHECKED BY: ENG'G.,PUBL.SV.		Brian K. Bornstein CITY ENGINEER
	DETAIL SL-5	DATE: 05/20/11	ELECTROLIER LOCATION	SHT 1 of 1

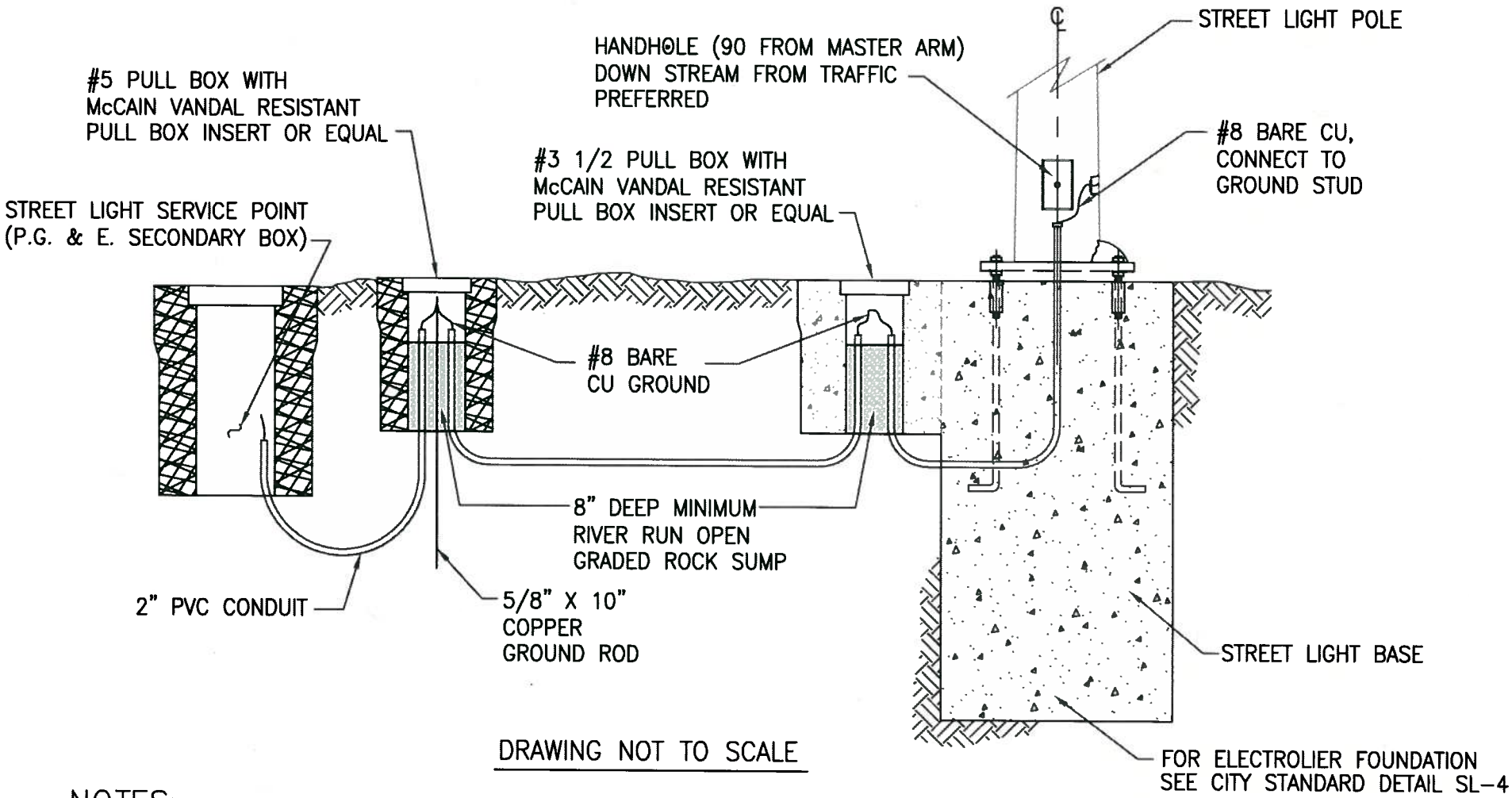

DRAWING NOT TO SCALE

NOTES:

1. FUSE BOX TO BE LOCATED IN THE HANDHOLE OF STREET LIGHT.
2. SEE COVERAGE NOTES ON DETAIL SL-4.

San Ramon CALIFORNIA INCORPORATED 1980	CITY OF SAN RAMON	DRAWN BY: ELR	STANDARD DETAIL	APPROVED BY: DATE: 6/1/11
		CHECKED BY: ENG'G.,PUBL.SV.		Brian N Bornstein CITY ENGINEER
	DETAIL SL-6	DATE: 05/20/11	ELECTROLIER GROUNDING DETAIL	SHT 1 of 1